Lex

ARKOSLIGHT

DIMENSIONS

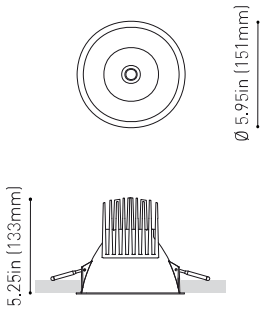

Accessories

OPTIONAL MOUNTING ACCESSORY

Awards

DESIGN PLUS 2012 AWARD

Premios Delta'12 Δ Selección

	PRODUCT
Name	LEX UL 2700K G
Reference	U0700100G
Color	Gold
RAL	1036
Category	CEILING RECESSED

	MOUNTING ACCESSORY / DRIVER
Mounting Accessory / Driver	Mandatory, not included. See next page
Model	REMOTE BOX 3.5-12.3W 220mA
Reference	U1000113

	LIGHT SOURCE
Type	LED
Gross luminous flux	950 Lm
Color temperature	2700 K
Chromatic stability	MacAdam Step 2
Color Rendering Index	CRI>90
Power	7.1 W
Current	220 mA
Efficacy	134 Lm/W
LED lifespan	L90B10>55.000h

	LIGHTING FIXTURE | PHOTOMETRIC DATA
Lighting efficiency	67%
Delivered luminous flux	637 Lm
Light beam angle	71°

	LIGHTING FIXTURE | ELECTRICAL DATA
Power values of the system	10 W
Voltage	120-277 V
Frequency	50/60 Hz
Dimming	0-10V

	OTHER DATA
IC Rated	Yes
Environmental location	DAMP

As the location of its LED is set back, Lex achieves great visual comfort. Its matte finish shade fosters this aspect and offers elegant aesthetics.

Calle N, s/n - Pol. Ind. El Oliveral
46394 Ribarroja del Turia - Valencia (Spain)
info@arkoslight.com - www.arkoslight.com

5 Year GUARANTEE*

Lex

ARKOSLIGHT

	OTHER DATA
Recess measurements	Ø5.50 in | Ø140 mm
Weight	1.15 lb | 520 gr
Packaged weight	1.65 lb | 750 gr
Packaging dimensions	9.45x8.35x6.42 in | 240x212x163 mm
Materials	Aluminium / Polycarbonate

Intertek

DIMENSIONS

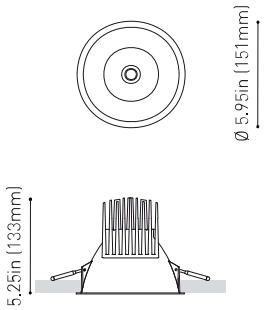

Accessories

OPTIONAL MOUNTING ACCESSORY

Awards

DESIGN PLUS 2012 AWARD

Premios Delta'12 Δ Selección

As the location of its LED is set back, Lex achieves great visual comfort. Its matte finish shade fosters this aspect and offers elegant aesthetics.

Calle N, s/n - Pol. Ind. El Oliveral
46394 Ribarroja del Turia - Valencia (Spain)
info@arkoslight.com - www.arkoslight.com

5 Year GUARANTEE*

Mounting Accessory / Driver

ARKOSLIGHT

Mandatory / Not Included

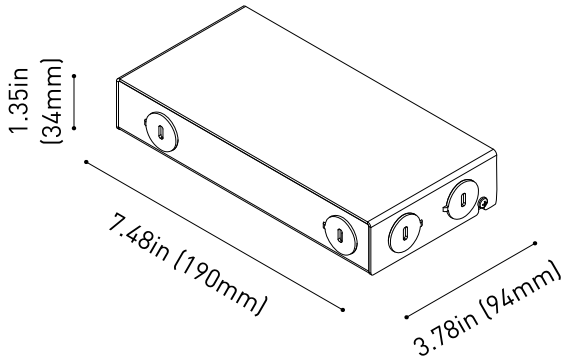

	PRODUCT
Model	REMOTE BOX 3.5-12.3W 220mA
Driver	Included
Reference	U1000113
IC Rated	Yes
Dimming	0-10V
Size	7.48 x 3.78 x 1.35 in | 190 x 94 x 34 mm
Weight	1.89 lb | 860 gr
Packaged weight	2.01 lb | 915 gr
Packaging dimensions	9.53 x 4.13 x 1.54 in | 242 x 105 x 39 mm
Nº Luminaires	1
LED - Driver Distance	18 AWG - 447 ft (350 mA) / 224 ft (700 mA) 16 AWG - 711 ft (350 mA) / 356 ft (700 mA) 14 AWG - 1132 ft (350 mA) / 566 ft (700 mA)

	INPUT CHARACTERISTICS
Input Voltage	120-277 V
Frequency	50/60 Hz

	OUTPUT CHARACTERISTICS
Output Voltage	16 - 56 V
Output Current	220 mA
Output Power	3.5 - 12.3 W

Intertek

Calle N, s/n - Pol. Ind. El Oliveral
46394 Ribarroja del Turia - Valencia (Spain)
info@arkoslight.com - www.arkoslight.com

5 Year GUARANTEE*

Lighting Technical Data

ARKOSLIGHT

POLAR DIAGRAM

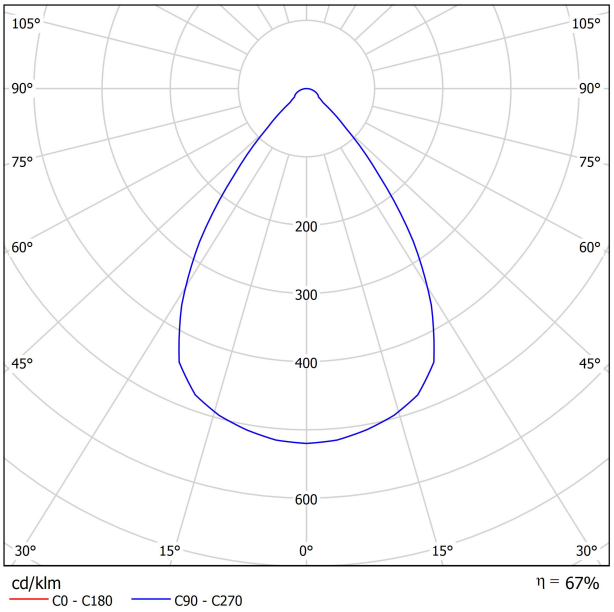

CONICAL DIAGRAM

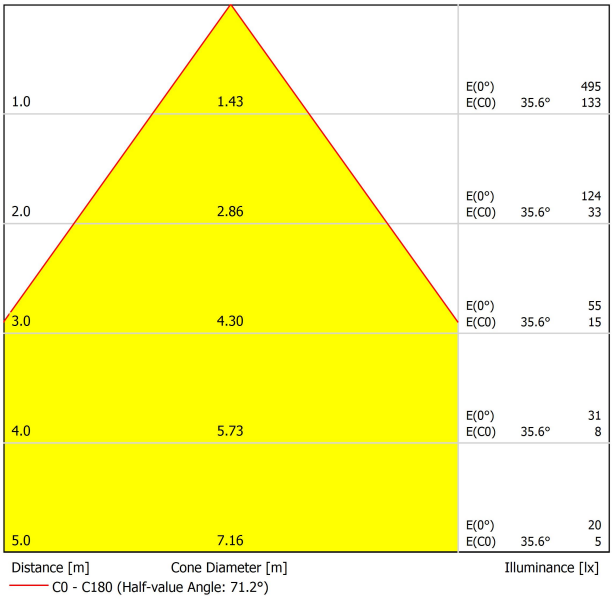

UGR

Glare Evaluation According to UGR

ρ Ceiling		70	70	50	50	30	70	70	50	50	30
ρ Walls		50	30	50	30	30	50	30	50	30	30
ρ Floor		20	20	20	20	20	20	20	20	20	20
Room Size X	Y	Viewing direction at right angles to lamp axis					Viewing direction parallel to lamp axis				
2H	2H	9.9	10.8	10.2	11.0	11.2	9.9	10.8	10.2	11.0	11.2
	3H	12.0	12.8	12.3	13.0	13.3	12.0	12.8	12.3	13.0	13.3
	4H	12.8	13.5	13.1	13.8	14.1	12.8	13.5	13.1	13.8	14.1
	6H	13.5	14.1	13.8	14.4	14.7	13.5	14.1	13.8	14.4	14.7
	8H	13.7	14.3	14.0	14.6	14.9	13.7	14.3	14.0	14.6	14.9
	12H	13.8	14.4	14.2	14.7	15.0	13.8	14.4	14.2	14.7	15.0
4H	2H	10.7	11.4	11.0	11.6	11.9	10.7	11.4	11.0	11.6	11.9
	3H	12.9	13.5	13.3	13.8	14.2	12.9	13.5	13.3	13.8	14.2
	4H	13.9	14.4	14.3	14.7	15.1	13.9	14.4	14.3	14.7	15.1
	6H	14.6	15.1	15.0	15.4	15.8	14.6	15.1	15.0	15.4	15.8
	8H	14.9	15.3	15.3	15.7	16.1	14.9	15.3	15.3	15.7	16.1
	12H	15.1	15.4	15.5	15.8	16.3	15.1	15.4	15.5	15.8	16.3
8H	4H	14.2	14.6	14.7	15.0	15.4	14.2	14.6	14.7	15.0	15.4
	6H	15.1	15.4	15.6	15.9	16.3	15.1	15.4	15.6	15.9	16.3
	8H	15.5	15.8	16.0	16.2	16.7	15.5	15.8	16.0	16.2	16.7
	12H	15.8	16.0	16.2	16.4	16.9	15.8	16.0	16.2	16.4	16.9
12H	4H	14.3	14.6	14.7	15.0	15.4	14.3	14.6	14.7	15.0	15.4
	6H	15.2	15.5	15.7	15.9	16.4	15.2	15.5	15.7	15.9	16.4
	8H	15.6	15.8	16.1	16.3	16.8	15.6	15.8	16.1	16.3	16.8
Variation of the observer position for the luminaire distances S											
S = 1.0H		+2.0 / -1.9					+2.0 / -1.9				
S = 1.5H		+4.1 / -2.1					+4.1 / -2.1				
S = 2.0H		+5.8 / -2.4					+5.8 / -2.4				
Standard table		BK02					BK02				
Correction Summand		-1.9					-1.9				
Corrected Glare Indices referring to 952lm Total Luminous Flux											

New construction Plaster Frame L

ARKOSLIGHT

Optional mounting accessory

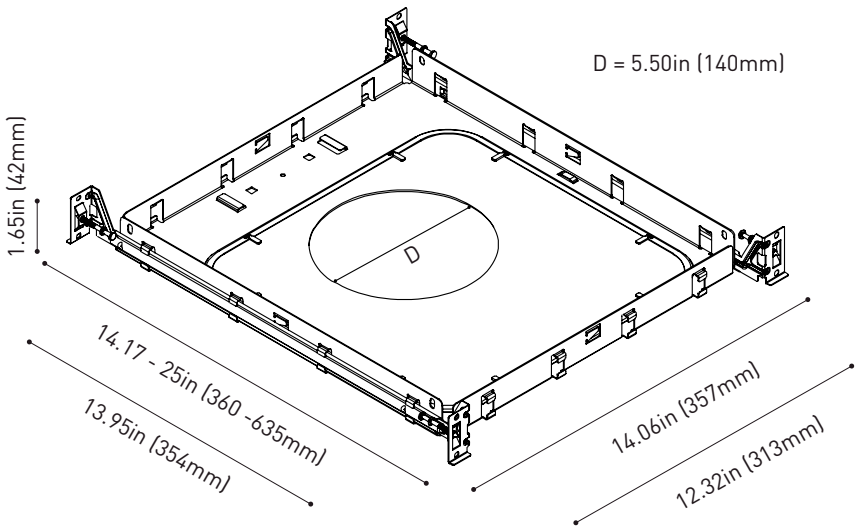

	PRODUCT
Model	NC PLASTER FRAME L Ø140
Reference	U100-01-14
Category	Optional Mounting Accessory
IC Rated	Yes
Weight	2.54 lb | 1155 g
Packaged Weight	3.98 lb | 1810 g
Packaging Dimensions	16.6x15.03x3.15 in | 422x382x80 mm

TO BE USED WITH REMOTE BOX

Calle N, s/n - Pol. Ind. El Oliveral
46394 Ribarroja del Turia-Valencia (Spain)
info@arkoslight.com - www.arkoslight.com

5Year GUARANTEE