Swap

ARKOSLIGHT

PRODUCT

Name	SWAP M UL 3000K G
Reference	U2122211G
Color	Gold
RAL	1036
Category	CEILING RECESSED

MOUNTING ACCESSORY / DRIVER

Mounting Accessory / Driver	Mandatory, not included. See next page
Model	REMOTE BOX 1.8-6.2W 110mA
Reference	U1000107

LIGHT SOURCE

Type	LED
Gross luminous flux	495 Lm
Color temperature	3000 K
Chromatic stability	MacAdam Step 2
Color Rendering Index	CRI>90
Power	3.6 W
Current	110 mA
Efficacy	138 Lm/W
LED lifespan	L90B10>55.000h

LIGHTING FIXTURE | PHOTOMETRIC DATA

Lighting efficiency	77%
Delivered luminous flux	381 Lm
Light beam angle	42°

LIGHTING FIXTURE | ELECTRICAL DATA

Power values of the system	6 W
Voltage	120-277 V
Frequency	50/60 Hz
Dimming	0-10V

OTHER DATA

IC Rated	Yes
Environmental location	DAMP

DIMENSIONS

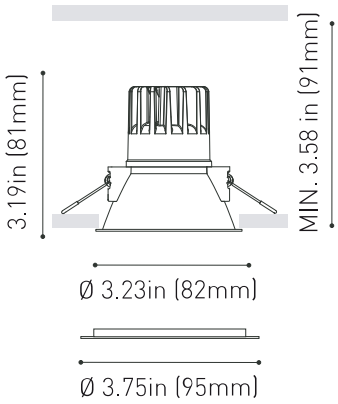

Accessories

OPTIONAL MOUNTING ACCESSORY

ADD-ON BEZEL

Awards

reddot design award winner 2015

GERMAN DESIGN AWARD NOMINEE 2016

Swap is a ceiling recessed LED spotlight whose main features are its minimalist aspect, its perfect integration into the ceiling, and considerable visual comfort, thanks to the small reflector that is set back with respect to the ceiling plane. When it is switched on, its matte finish shade generates an attractive effect, a discrete circle of light. It includes an add-on bezel that can be used optionally to cover larger recess diameters.

Calle N, s/n - Pol. Ind. El Oliveral
46394 Ribarroja del Turia - Valencia (Spain)
info@arkoslight.com - www.arkoslight.com

5 Year GUARANTEE*

Swap

ARKOSLIGHT

	OTHER DATA
Recess measurements	Ø2.95 in | Ø75 mm
Weight	0.28 lb | 125 gr
Packaged weight	0.36 lb | 165 gr
Packaging dimensions	3.98x4.06x3.90 in | 101x103x99 mm
Materials	Aluminium / Polycarbonate

Intertek

DIMENSIONS

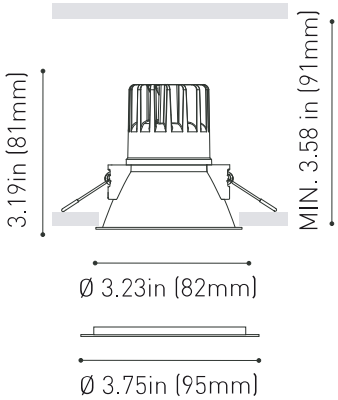

Accessories

OPTIONAL MOUNTING ACCESSORY

ADD-ON BEZEL

Awards

reddot design award winner 2015

GERMAN DESIGN AWARD NOMINEE 2016

Swap is a ceiling recessed LED spotlight whose main features are its minimalist aspect, its perfect integration into the ceiling, and considerable visual comfort, thanks to the small reflector that is set back with respect to the ceiling plane. When it is switched on, its matte finish shade generates an attractive effect, a discrete circle of light. It includes an add-on bezel that can be used optionally to cover larger recess diameters.

Calle N, s/n - Pol. Ind. El Oliveral
46394 Ribarroja del Turia - Valencia (Spain)
info@arkoslight.com - www.arkoslight.com

5 Year GUARANTEE*

Mounting Accessory / Driver

ARKOSLIGHT

Mandatory / Not Included

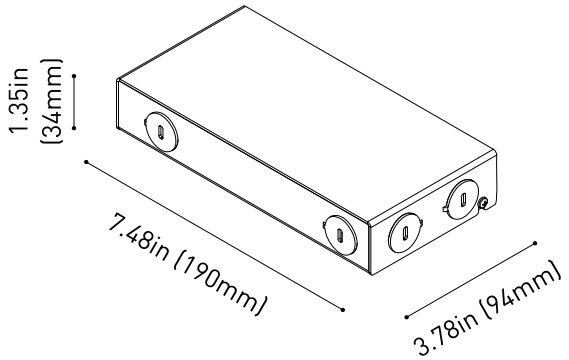

	PRODUCT
Model	REMOTE BOX 1.8-6.2W 110mA
Driver	Included: EVERLINE - PW series or similar
Reference	U1000107
IC Rated	Yes
Dimming	0-10V
Size	7.48 x 3.78 x 1.35 in | 190 x 94 x 34 mm
Weight	1.89 lb | 860 gr
Packaged weight	2.01 lb | 915 gr
Packaging dimensions	9.53 x 4.13 x 1.54 in | 242 x 105 x 39 mm
Nº Luminaires	1
LED - Driver Distance	18 AWG - 447 ft (350 mA) / 224 ft (700 mA) 16 AWG - 711 ft (350 mA) / 356 ft (700 mA) 14 AWG - 1132 ft (350 mA) / 566 ft (700 mA)

	INPUT CHARACTERISTICS
Input Voltage	120-277 V
Frequency	50/60 Hz

	OUTPUT CHARACTERISTICS
Output Voltage	16 - 56 V
Output Current	110 mA
Output Power	1.8 - 6.2 W

Intertek

Calle N, s/n - Pol. Ind. El Oliveral
46394 Ribarroja del Turia - Valencia (Spain)
info@arkoslight.com - www.arkoslight.com

5 Year GUARANTEE*

Lighting Technical Data

ARKOSLIGHT

POLAR DIAGRAM

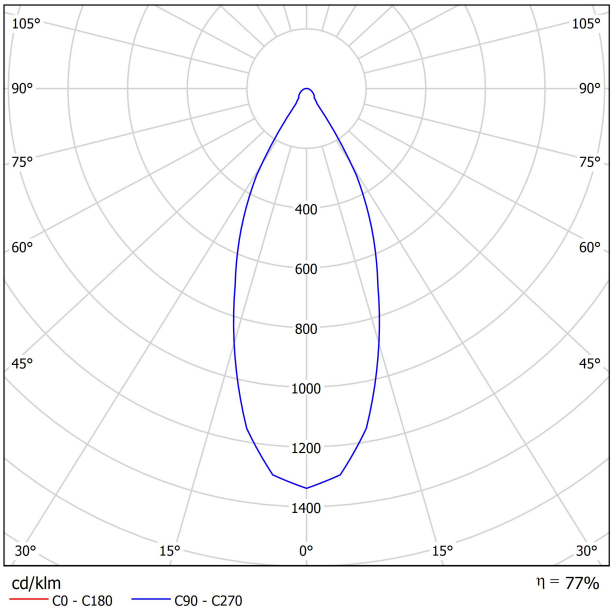

CONICAL DIAGRAM

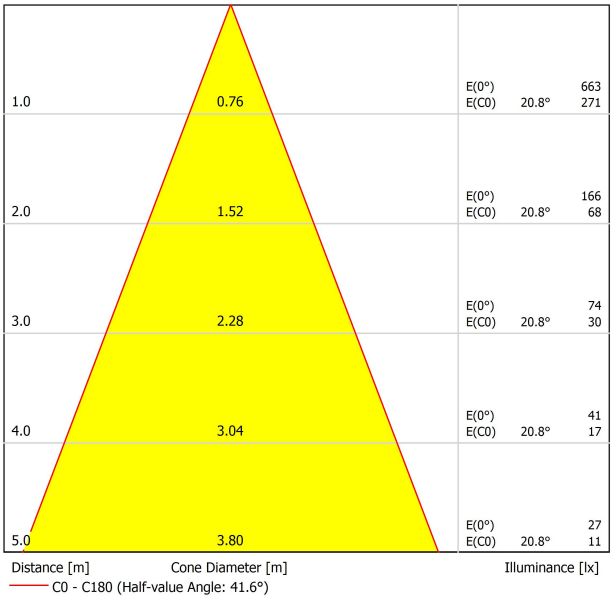

UGR

Glare Evaluation According to UGR

ρ Ceiling		70	70	50	50	30	70	70	50	50	30
ρ Walls		50	30	50	30	30	50	30	50	30	30
ρ Floor		20	20	20	20	20	20	20	20	20	20
Room Size X	Y	Viewing direction at right angles to lamp axis					Viewing direction parallel to lamp axis				
2H	2H	13.0	13.8	13.3	14.0	14.2	13.0	13.8	13.3	14.0	14.2
	3H	14.9	15.6	15.1	15.8	16.0	14.9	15.6	15.1	15.8	16.0
	4H	15.7	16.3	16.0	16.6	16.8	15.7	16.3	16.0	16.6	16.8
	6H	16.4	17.0	16.7	17.3	17.6	16.4	17.0	16.7	17.3	17.6
	8H	16.8	17.4	17.1	17.6	18.0	16.8	17.4	17.1	17.6	18.0
	12H	17.1	17.7	17.5	18.0	18.3	17.1	17.7	17.5	18.0	18.3
4H	2H	13.6	14.3	13.9	14.5	14.8	13.6	14.3	13.9	14.5	14.8
	3H	15.7	16.2	16.0	16.5	16.9	15.7	16.2	16.0	16.5	16.9
	4H	16.7	17.2	17.0	17.5	17.8	16.7	17.2	17.0	17.5	17.8
	6H	17.6	18.0	18.0	18.4	18.8	17.6	18.0	18.0	18.4	18.8
	8H	18.0	18.4	18.5	18.8	19.2	18.0	18.4	18.5	18.8	19.2
	12H	18.5	18.8	18.9	19.2	19.6	18.5	18.8	18.9	19.2	19.6
8H	4H	17.1	17.4	17.5	17.8	18.2	17.1	17.4	17.5	17.8	18.2
	6H	18.2	18.5	18.6	18.9	19.3	18.2	18.5	18.6	18.9	19.3
	8H	18.8	19.0	19.2	19.4	19.9	18.8	19.0	19.2	19.4	19.9
	12H	19.3	19.5	19.8	20.0	20.5	19.3	19.5	19.8	20.0	20.5
12H	4H	17.1	17.4	17.5	17.8	18.3	17.1	17.4	17.5	17.8	18.3
	6H	18.3	18.5	18.8	19.0	19.5	18.3	18.5	18.8	19.0	19.5
	8H	19.0	19.2	19.4	19.6	20.1	19.0	19.2	19.4	19.6	20.1
Variation of the observer position for the luminaire distances S											
S = 1.0H		+1.0 / -0.3					+1.0 / -0.3				
S = 1.5H		+2.1 / -0.5					+2.1 / -0.5				
S = 2.0H		+3.2 / -0.8					+3.2 / -0.8				
Standard table		BK06					BK06				
Correction Summand		3.0					3.0				
Corrected Glare Indices referring to 495lm Total Luminous Flux											

New construction Plaster Frame S

ARKOSLIGHT

Optional mounting accessory

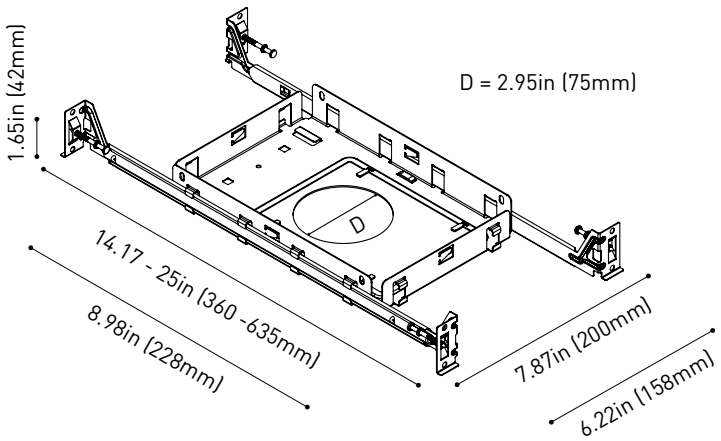

	PRODUCT
Model	NC PLASTER FRAME S Ø75
Reference	U100-01-09
Category	Optional Mounting Accessory
IC Rated	Yes
Weight	1.13 lb | 514 g
Packaged Weight	1.90 lb | 864 g
Packaging Dimensions	16.53x8.93x3.15 in | 420x227x80 mm

TO BE USED WITH REMOTE BOX

Calle N, s/n - Pol. Ind. El Oliveral
46394 Ribarroja del Turia-Valencia (Spain)
info@arkoslight.com - www.arkoslight.com

5Year GUARANTEE

Add-on bezel

ARKOSLIGHT

	PRODUCT
Model	Swap L Add-On Bezel
Colour	W ☐ | Matt white
Category	Accessories

2.95 - 3.11 in (75 - 79 mm)

+

3.11 - 3.58 in (79 - 91 mm)

Add-on bezel

Accessory always included but for optional use.

It extends the piece's bezel to cover larger recesses, keeping Swap's minimalism and its perfect integration into the ceiling.

Easy to fit. Ideal for reforms to replace the light spot, with the already existing holes, without altering the ceiling or repainting. Swap is the best option for updating to LED technology by means of a real light fixture with incorporated LED, in contrast to just a retrofit lamp that only implies a less efficient update of the light source.

Calle N, s/n - Pol. Ind. El Oliveral
46394 Ribarroja del Turia-Valencia (Spain)
info@arkoslight.com - www.arkoslight.com

5 Year GUARANTEE