# Spin

ARKOSLIGHT

| | PRODUCT |
|---|---|
| Name | SPIN UL 3M 40º 2700K WT |
| Reference | U2221210WT |
| Color | Textured white |
| RAL | 9016 |
| Category | SUSPENSION |

| | MOUNTING ACCESSORY / DRIVER |
|---|---|
| Mounting Accessory / Driver | Mandatory, not included. See next page |
| Model | REMOTE BOX 5.6-33W 700mA |
| Reference | U100003602 |

| | LIGHT SOURCE |
|---|---|
| Type | LED |
| Gross luminous flux | 600 Lm |
| Color temperature | 2700 K |
| Chromatic stability | MacAdam Step 2 |
| Color Rendering Index | CRI>90 |
| Power | 6.5 W |
| Current | 700 mA |
| Efficacy | 92 Lm/W |
| LED lifespan | L90B10>60.000h |

| | LIGHTING FIXTURE \| PHOTOMETRIC DATA |
|---|---|
| Lighting efficiency | 84% |
| Delivered luminous flux | 504 Lm |
| Light beam angle | 40 |

| | LIGHTING FIXTURE \| ELECTRICAL DATA |
|---|---|
| Power values of the system | 8.8 W |
| Voltage | 120-277 V |
| Frequency | 50/60 Hz |
| Dimming | 0-10V |

| | OTHER DATA |
|---|---|
| IC Rated | Yes |
| Environmental location | DAMP |

## DIMENSIONS

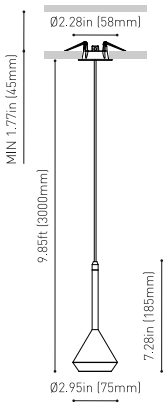


## Accessories

CORD ACCESSORY

## Awards

Reduced dimensions, clear lines and a mechanized geometry combined in a pendant luminaire for accent lighting. Its ultra-thin cable gives Spin a sensation of aerial floatability. Can be fitted individually or configured in a group.

Calle N, s/n - Pol. Ind. El Oliveral
46394 Ribarroja del Turia - Valencia (Spain)
info@arkoslight.com - www.arkoslight.com



5 Year GUARANTEE*

# Spin

ARKOSLIGHT

| | OTHER DATA |
|---|---|
| Recess measurements | Ø1.97 in \| Ø50 mm |
| Cord Length | 9.85 ft \| 3 m |
| Fast adjustment tensioner | No |
| Weight | 0.944 lb \| 428 gr |
| Packaged weight | 1.243 lb \| 564 gr |
| Packaging dimensions | 15.16 x 4.06 x 3.07 in \| 385 x 103 x 78 mm |
| Materials | Aluminium - Polymethyl Methacrylate |

Intertek

## DIMENSIONS

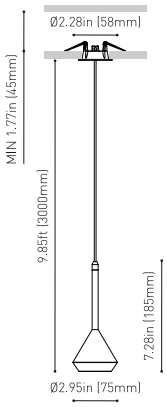


## Accessories

CORD ACCESSORY

## Awards

Reduced dimensions, clear lines and a mechanized geometry combined in a pendant luminaire for accent lighting. Its ultra-thin cable gives Spin a sensation of aerial floatability. Can be fitted individually or configured in a group.

Calle N, s/n - Pol. Ind. El Oliveral
46394 Ribarroja del Turia - Valencia (Spain)
info@arkoslight.com - www.arkoslight.com



5 Year GUARANTEE*

# Mounting Accessory / Driver

ARKOSLIGHT

## Mandatory / Not Included

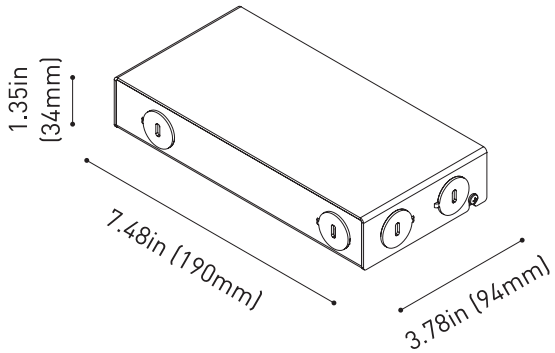


| | PRODUCT |
|---|---|
| **Model** | REMOTE BOX 5.6-33W 700mA |
| **Driver** | Included |
| **Reference** | U100003602 |
| **IC Rated** | Yes |
| **Dimming** | 0-10V |
| **Size** | 7.48 x 3.78 x 1.35 in \| 190 x 94 x 34 mm |
| **Weight** | 1.8 lb \| 820 gr |
| **Packaged weight** | 1.93 lb \| 875 gr |
| **Packaging dimensions** | 9.53 x 4.13 x 1.54 in \| 242 x 105 x 39 mm |
| **Nº Luminaires** | 1 to 3 |
| **LED - Driver Distance** | Maximum suggested distance is 16 feet |

| | INPUT CHARACTERISTICS |
|---|---|
| **Input Voltage** | 120-277 V |
| **Frequency** | 50/60 Hz |

| | OUTPUT CHARACTERISTICS |
|---|---|
| **Output Voltage** | 8 - 47 V |
| **Output Current** | 700 mA |
| **Output Power** | 5.6 - 33 W |

Intertek

Calle N, s/n - Pol. Ind. El Oliveral
46394 Ribarroja del Turia - Valencia (Spain)
info@arkoslight.com - www.arkoslight.com



5 Year GUARANTEE*

# Wiring Diagram

ARKOSLIGHT

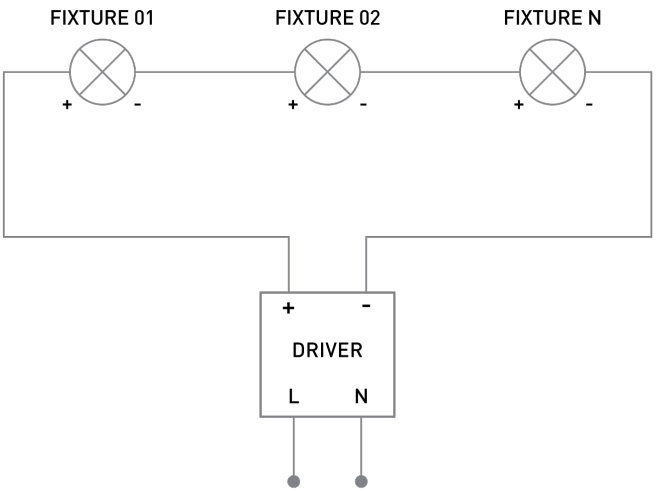


SERIAL CONNECTION FOR SEVERAL FIXTURES TO A SINGLE CONSTANT CURRENT DRIVER
RESPECT THE DISTANCE LED - DRIVER

Calle N, s/n - Pol. Ind. El Oliveral
46394 Ribarroja del Turia - Valencia (Spain)
info@arkoslight.com - www.arkoslight.com



5 Year GUARANTEE*

# Lighting Technical Data

ARKOSLIGHT

## POLAR DIAGRAM

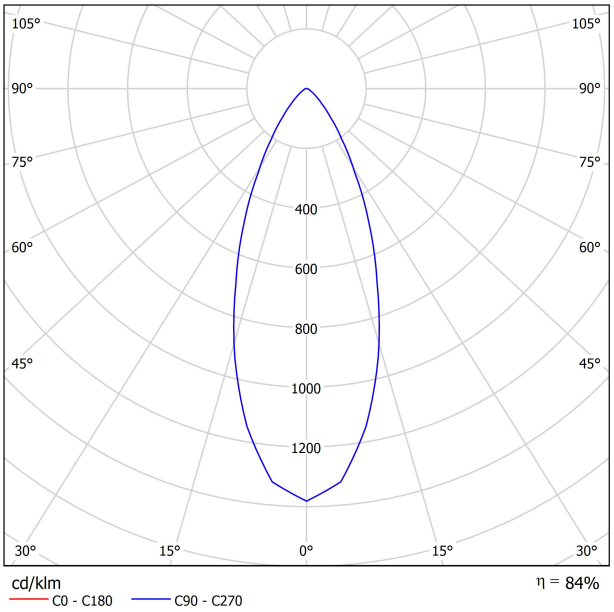


## CONICAL DIAGRAM

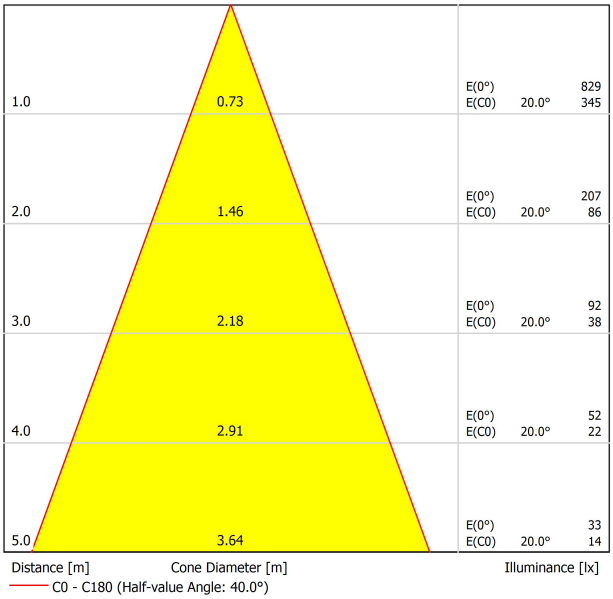


## UGR

**Glare Evaluation According to UGR**

| | | | | | | | | | | | |
|---|---|---|---|---|---|---|---|---|---|---|---|
| ρ Ceiling | | 70 | 70 | 50 | 50 | 30 | 70 | 70 | 50 | 50 | 30 |
| ρ Walls | | 50 | 30 | 50 | 30 | 30 | 50 | 30 | 50 | 30 | 30 |
| ρ Floor | | 20 | 20 | 20 | 20 | 20 | 20 | 20 | 20 | 20 | 20 |
| Room Size X | Y | Viewing direction at right angles to lamp axis | | | | | Viewing direction parallel to lamp axis | | | | |
| 2H | 2H | 19.3 | 20.1 | 19.6 | 20.3 | 20.5 | 19.3 | 20.1 | 19.6 | 20.3 | 20.5 |
| | 3H | 20.2 | 20.9 | 20.5 | 21.1 | 21.4 | 20.2 | 20.9 | 20.5 | 21.1 | 21.4 |
| | 4H | 20.7 | 21.3 | 21.0 | 21.6 | 21.8 | 20.7 | 21.3 | 21.0 | 21.6 | 21.8 |
| | 6H | 21.1 | 21.7 | 21.4 | 22.0 | 22.3 | 21.1 | 21.7 | 21.4 | 22.0 | 22.3 |
| | 8H | 21.3 | 21.9 | 21.7 | 22.2 | 22.5 | 21.3 | 21.9 | 21.7 | 22.2 | 22.5 |
| | 12H | 21.6 | 22.2 | 22.0 | 22.5 | 22.8 | 21.6 | 22.2 | 22.0 | 22.5 | 22.8 |
| 4H | 2H | 19.5 | 20.2 | 19.8 | 20.4 | 20.7 | 19.5 | 20.2 | 19.8 | 20.4 | 20.7 |
| | 3H | 20.7 | 21.2 | 21.0 | 21.5 | 21.8 | 20.7 | 21.2 | 21.0 | 21.5 | 21.8 |
| | 4H | 21.3 | 21.8 | 21.7 | 22.1 | 22.5 | 21.3 | 21.8 | 21.7 | 22.1 | 22.5 |
| | 6H | 21.9 | 22.3 | 22.3 | 22.7 | 23.1 | 21.9 | 22.3 | 22.3 | 22.7 | 23.1 |
| | 8H | 22.2 | 22.6 | 22.7 | 23.0 | 23.4 | 22.2 | 22.6 | 22.7 | 23.0 | 23.4 |
| | 12H | 22.6 | 23.0 | 23.1 | 23.4 | 23.8 | 22.6 | 23.0 | 23.1 | 23.4 | 23.8 |
| 8H | 4H | 21.5 | 21.9 | 21.9 | 22.3 | 22.7 | 21.5 | 21.9 | 21.9 | 22.3 | 22.7 |
| | 6H | 22.3 | 22.6 | 22.8 | 23.0 | 23.5 | 22.3 | 22.6 | 22.8 | 23.0 | 23.5 |
| | 8H | 22.8 | 23.0 | 23.2 | 23.5 | 23.9 | 22.8 | 23.0 | 23.2 | 23.5 | 23.9 |
| | 12H | 23.4 | 23.6 | 23.8 | 24.0 | 24.5 | 23.4 | 23.6 | 23.8 | 24.0 | 24.5 |
| 12H | 4H | 21.6 | 21.9 | 22.0 | 22.3 | 22.7 | 21.6 | 21.9 | 22.0 | 22.3 | 22.7 |
| | 6H | 22.4 | 22.6 | 22.9 | 23.1 | 23.5 | 22.4 | 22.6 | 22.9 | 23.1 | 23.5 |
| | 8H | 22.9 | 23.1 | 23.4 | 23.6 | 24.1 | 22.9 | 23.1 | 23.4 | 23.6 | 24.1 |
| Variation of the observer position for the luminaire distances S | | | | | | | | | | | |
| S = 1.0H | | +2.0 / -1.8 | | | | | +2.0 / -1.8 | | | | |
| S = 1.5H | | +4.0 / -2.5 | | | | | +4.0 / -2.5 | | | | |
| S = 2.0H | | +5.8 / -3.1 | | | | | +5.8 / -3.1 | | | | |
| Standard table | | BK02 | | | | | BK02 | | | | |
| Correction Summand | | 8.2 | | | | | 8.2 | | | | |
| Corrected Glare Indices referring to 600lm Total Luminous Flux | | | | | | | | | | | |

# Cord Accessory

ARKOSLIGHT

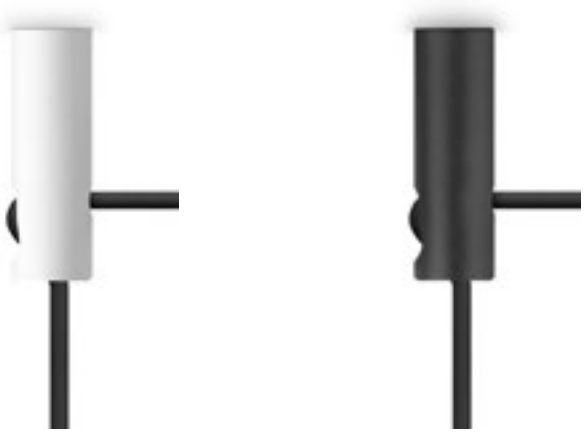

| | PRODUCT |
|---|---|
| Model | Cord Accessory UL |
| Reference | **U223-00-00** \| **W** \| **N** \| |
| Colour | **W** ☐ RAL 9016 \| **N** ■ RAL9005 |
| Category | Accessories |

## Dimmensional drawing

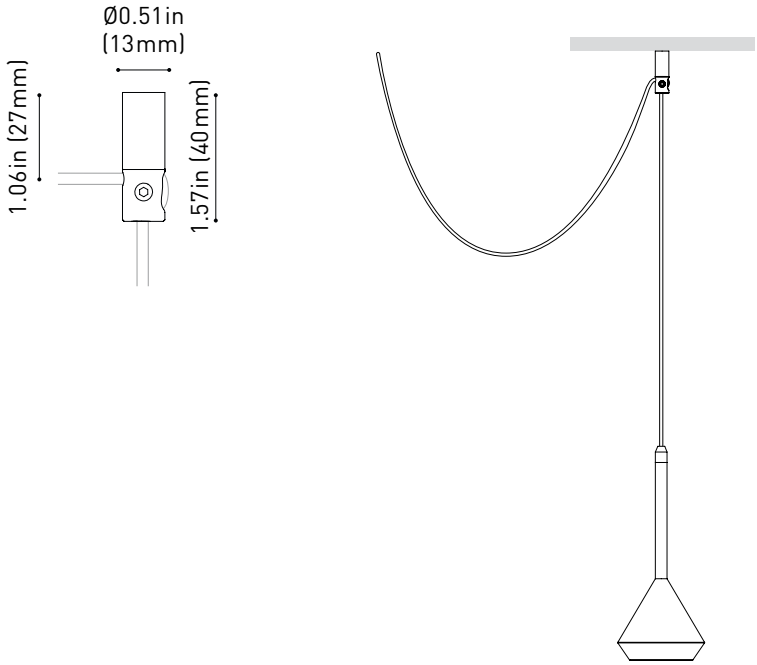


Calle N, s/n - Pol. Ind. El Oliveral
46394 Ribarroja del Turia-Valencia (Spain)
info@arkoslight.com - www.arkoslight.com

5Year GUARANTEE