Spin

ARKOSLIGHT

	PRODUCT
Name	SPIN UL 5M 40º 3000K WT
Reference	U2222211WT
Color	Textured white
RAL	9016
Category	SUSPENSION

	MOUNTING ACCESSORY / DRIVER
Mounting Accessory / Driver	Mandatory, not included. See next page
Model	REMOTE BOX 5.6-33W 700mA
Reference	U100003602

	LIGHT SOURCE
Type	LED
Gross luminous flux	630 Lm
Color temperature	3000 K
Chromatic stability	MacAdam Step 2
Color Rendering Index	CRI>90
Power	6.5 W
Current	700 mA
Efficacy	97 Lm/W
LED lifespan	L90B10>60.000h

	LIGHTING FIXTURE | PHOTOMETRIC DATA
Lighting efficiency	84%
Delivered luminous flux	529 Lm
Light beam angle	40

	LIGHTING FIXTURE | ELECTRICAL DATA
Power values of the system	8.8 W
Voltage	120-277 V
Frequency	50/60 Hz
Dimming	0-10V

	OTHER DATA
IC Rated	Yes
Environmental location	DAMP

DIMENSIONS

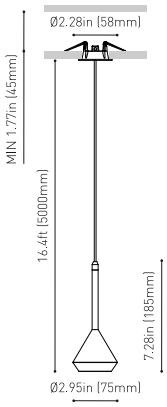

Accessories

CORD ACCESSORY

Awards

Reduced dimensions, clear lines and a mechanized geometry combined in a pendant luminaire for accent lighting. Its ultra-thin cable gives Spin a sensation of aerial floatability. Can be fitted individually or configured in a group.

Calle N, s/n - Pol. Ind. El Oliveral
46394 Ribarroja del Turia - Valencia (Spain)
info@arkoslight.com - www.arkoslight.com

5 Year GUARANTEE*

Spin

ARKOSLIGHT

	OTHER DATA
Recess measurements	Ø1.97 in | Ø50 mm
Cord Length	16.4 ft | 5 m
Fast adjustment tensioner	No
Weight	0.944 lb | 428 gr
Packaged weight	1.243 lb | 564 gr
Packaging dimensions	15.16 x 4.06 x 3.07 in | 385 x 103 x 78 mm
Materials	Aluminium - Polymethyl Methacrylate

Intertek

DIMENSIONS

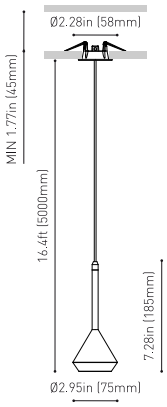

Accessories

CORD ACCESSORY

Awards

Reduced dimensions, clear lines and a mechanized geometry combined in a pendant luminaire for accent lighting. Its ultra-thin cable gives Spin a sensation of aerial floatability. Can be fitted individually or configured in a group.

Calle N, s/n - Pol. Ind. El Oliveral
46394 Ribarroja del Turia - Valencia (Spain)
info@arkoslight.com - www.arkoslight.com

5 Year GUARANTEE*

Mounting Accessory / Driver

ARKOSLIGHT

Mandatory / Not Included

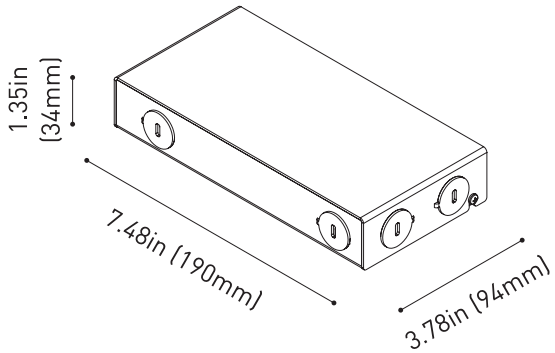

	PRODUCT
Model	REMOTE BOX 5.6-33W 700mA
Driver	Included
Reference	U100003602
IC Rated	Yes
Dimming	0-10V
Size	7.48 x 3.78 x 1.35 in | 190 x 94 x 34 mm
Weight	1.8 lb | 820 gr
Packaged weight	1.93 lb | 875 gr
Packaging dimensions	9.53 x 4.13 x 1.54 in | 242 x 105 x 39 mm
Nº Luminaires	1 to 3
LED - Driver Distance	Maximum suggested distance is 16 feet

	INPUT CHARACTERISTICS
Input Voltage	120-277 V
Frequency	50/60 Hz

	OUTPUT CHARACTERISTICS
Output Voltage	8 - 47 V
Output Current	700 mA
Output Power	5.6 - 33 W

Calle N, s/n - Pol. Ind. El Oliveral
46394 Ribarroja del Turia - Valencia (Spain)
info@arkoslight.com - www.arkoslight.com

Wiring Diagram

ARKOSLIGHT

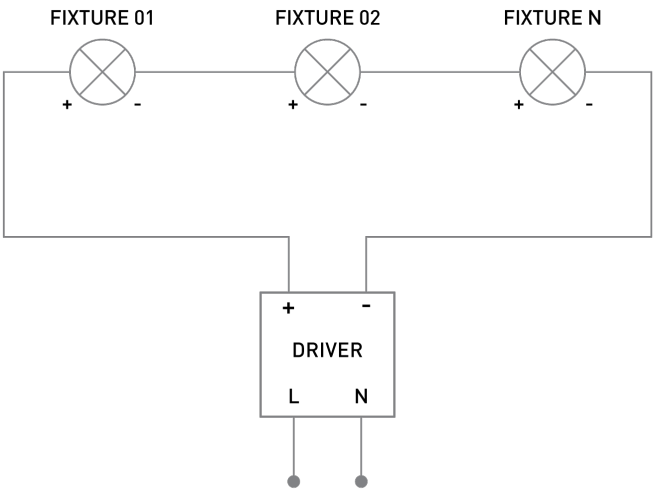

SERIAL CONNECTION FOR SEVERAL FIXTURES TO A SINGLE CONSTANT CURRENT DRIVER
RESPECT THE DISTANCE LED - DRIVER

Lighting Technical Data

ARKOSLIGHT

POLAR DIAGRAM

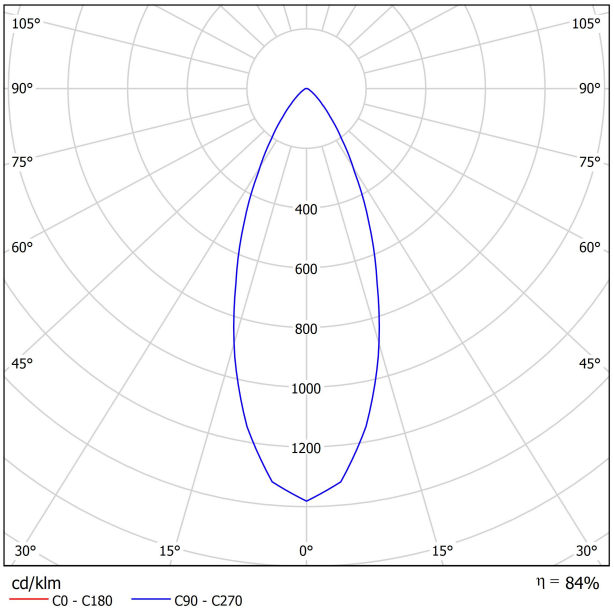

CONICAL DIAGRAM

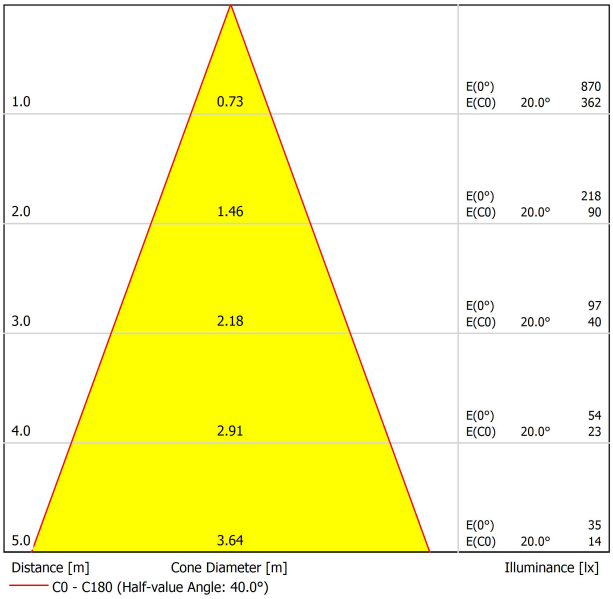

UGR

Glare Evaluation According to UGR

ρ Ceiling		70	70	50	50	30	70	70	50	50	30
ρ Walls		50	30	50	30	30	50	30	50	30	30
ρ Floor		20	20	20	20	20	20	20	20	20	20
Room Size X	Y	Viewing direction at right angles to lamp axis					Viewing direction parallel to lamp axis				
2H	2H	19.5	20.3	19.7	20.5	20.7	19.5	20.3	19.7	20.5	20.7
	3H	20.4	21.1	20.7	21.3	21.6	20.4	21.1	20.7	21.3	21.6
	4H	20.8	21.5	21.1	21.7	22.0	20.8	21.5	21.1	21.7	22.0
	6H	21.3	21.9	21.6	22.2	22.4	21.3	21.9	21.6	22.2	22.4
	8H	21.5	22.1	21.8	22.4	22.7	21.5	22.1	21.8	22.4	22.7
	12H	21.8	22.3	22.1	22.6	23.0	21.8	22.3	22.1	22.6	23.0
4H	2H	19.7	20.4	20.0	20.6	20.9	19.7	20.4	20.0	20.6	20.9
	3H	20.8	21.4	21.2	21.7	22.0	20.8	21.4	21.2	21.7	22.0
	4H	21.5	21.9	21.8	22.3	22.6	21.5	21.9	21.8	22.3	22.6
	6H	22.1	22.5	22.5	22.8	23.2	22.1	22.5	22.5	22.8	23.2
	8H	22.4	22.8	22.8	23.1	23.6	22.4	22.8	22.8	23.1	23.6
	12H	22.8	23.1	23.2	23.5	24.0	22.8	23.1	23.2	23.5	24.0
8H	4H	21.7	22.1	22.1	22.4	22.8	21.7	22.1	22.1	22.4	22.8
	6H	22.5	22.8	22.9	23.2	23.6	22.5	22.8	22.9	23.2	23.6
	8H	22.9	23.2	23.4	23.6	24.1	22.9	23.2	23.4	23.6	24.1
	12H	23.5	23.7	24.0	24.2	24.7	23.5	23.7	24.0	24.2	24.7
12H	4H	21.7	22.0	22.2	22.4	22.9	21.7	22.0	22.2	22.4	22.9
	6H	22.6	22.8	23.0	23.2	23.7	22.6	22.8	23.0	23.2	23.7
	8H	23.1	23.3	23.6	23.8	24.3	23.1	23.3	23.6	23.8	24.3
Variation of the observer position for the luminaire distances S											
S = 1.0H		+2.0 / -1.8					+2.0 / -1.8				
S = 1.5H		+4.0 / -2.5					+4.0 / -2.5				
S = 2.0H		+5.8 / -3.1					+5.8 / -3.1				
Standard table		BK02					BK02				
Correction Summand		8.2					8.2				
Corrected Glare Indices referring to 630lm Total Luminous Flux											

Cord Accessory

ARKOSLIGHT

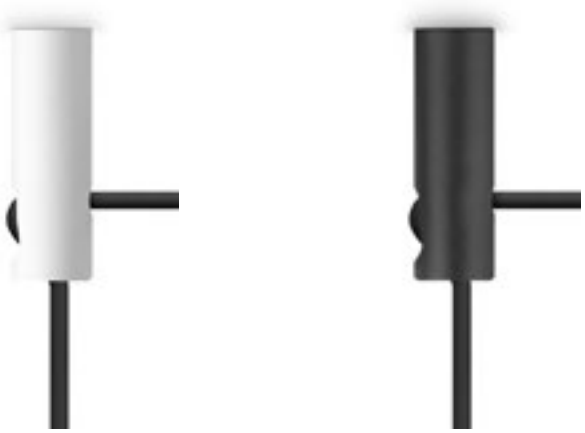

	PRODUCT
Model	Cord Accessory UL
Reference	**U223-00-00** | **W** | **N** |
Colour	**W** ☐ RAL 9016 | **N** ■ RAL9005
Category	Accessories

Dimmensional drawing

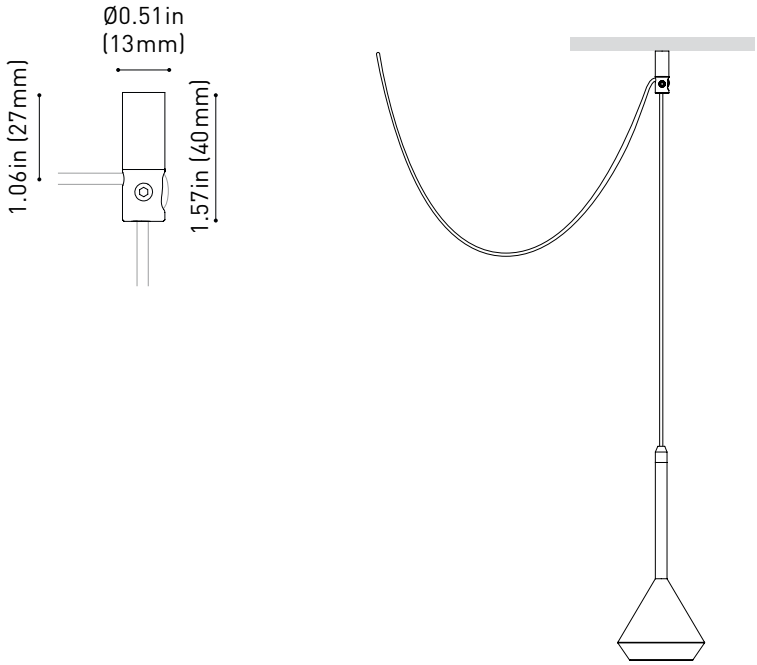

Calle N, s/n - Pol. Ind. El Oliveral
46394 Ribarroja del Turia-Valencia (Spain)
info@arkoslight.com - www.arkoslight.com

5Year GUARANTEE