Stram

ARKOSLIGHT

DIMENSIONS

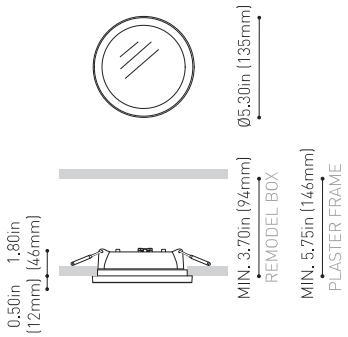

	PRODUCT
Name	STRAM MINI PRISMATIC UL 3000K WT
Reference	U2370111WT
Color	Textured white
RAL	9016
Category	CEILING RECESSED

	MOUNTING ACCESSORY / DRIVER
Mounting Accessory / Driver	Mandatory, not included. See next page
Model	NC PLASTER FRAME L Ø122 9.5-16.8W 700mA 120-277V
Reference	U1000051

	LIGHT SOURCE
Type	LED
Gross luminous flux	1375 Lm
Color temperature	3000 K
Chromatic stability	MacAdam Step 2
Color Rendering Index	CRI>90
Power	10 W
Current	700 mA
Efficacy	138 Lm/W
LED lifespan	L80B10>60.000h

	LIGHTING FIXTURE | PHOTOMETRIC DATA
Lighting efficiency	80%
Delivered luminous flux	1100 Lm
Light beam angle	87°

	LIGHTING FIXTURE | ELECTRICAL DATA
Power values of the system	13 W
Voltage	120-277 V
Frequency	50/60 Hz
Dimming	0-10V / TRIAC dimming only at 120Vac.

	OTHER DATA
IC Rated	Yes
Environmental location	DAMP

Awards

DELTA AWARDS'14
Selected

Ceiling recessed downlight, with a prominent bezel and textured finish, for general lighting functions with diffuse light. Its differentiated aesthetics provide distinction in spaces where it is fitted, considerably different to the traditional round downlight.

Calle N, s/n - Pol. Ind. El Oliveral
46394 Ribarroja del Turia - Valencia (Spain)
info@arkoslight.com - www.arkoslight.com

5 Year GUARANTEE*

Stram

ARKOSLIGHT

	OTHER DATA
Recess measurements	Ø4.80 in | Ø122 mm
Weight	0.66 lb | 300 gr
Packaged weight	0.88 lb | 400 gr
Packaging dimensions	7.99 x 6.77 x 2.83 in | 203 x 172 x 72 mm
Materials	Aluminium - Polymethyl Methacrylate

Intertek

DIMENSIONS

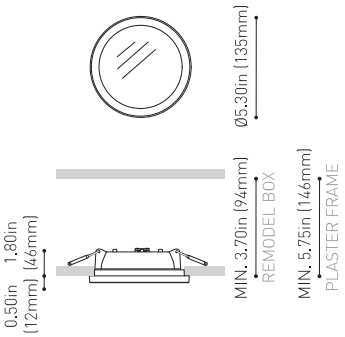

Awards

DELTA AWARDS'14
Selected

Ceiling recessed downlight, with a prominent bezel and textured finish, for general lighting functions with diffuse light. Its differentiated aesthetics provide distinction in spaces where it is fitted, considerably different to the traditional round downlight.

Calle N, s/n - Pol. Ind. El Oliveral
46394 Ribarroja del Turia - Valencia (Spain)
info@arkoslight.com - www.arkoslight.com

5 Year GUARANTEE*

Mounting Accessory / Driver

ARKOSLIGHT

Mandatory / Not Included

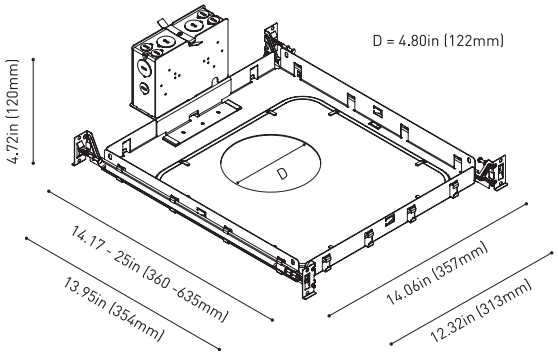

	PRODUCT
Model	NC PLASTER FRAME L Ø122 9.5-16.8W 700mA 120-277V
Driver	Included: APS L9WCD series or similar
Reference	U1000051
IC Rated	Yes
Dimming	0-10V / TRIAC dimming only at 120Vac.
Fast connect	Yes
Size	14.17 - 25 x 14.06 x 4.72 in | 360 - 635 x 357 x 120 mm
Weight	4.01 lb | 1824 gr
Packaged weight	5.74 lb | 2609 gr
Packaging dimensions	16.6 x 15.03 x 4.52 in | 422 x 382 x 115 mm
Nº Luminaires	1

	INPUT CHARACTERISTICS
Input Voltage	120-277 V
Frequency	50/60 Hz

	OUTPUT CHARACTERISTICS
Output Voltage	13 - 24 V
Output Current	700 mA
Output Power	9.5 - 16.8 W

Intertek

Calle N, s/n - Pol. Ind. El Oliveral
46394 Ribarroja del Turia - Valencia (Spain)
info@arkoslight.com - www.arkoslight.com

5 Year GUARANTEE*

Lighting Technical Data

ARKOSLIGHT

POLAR DIAGRAM

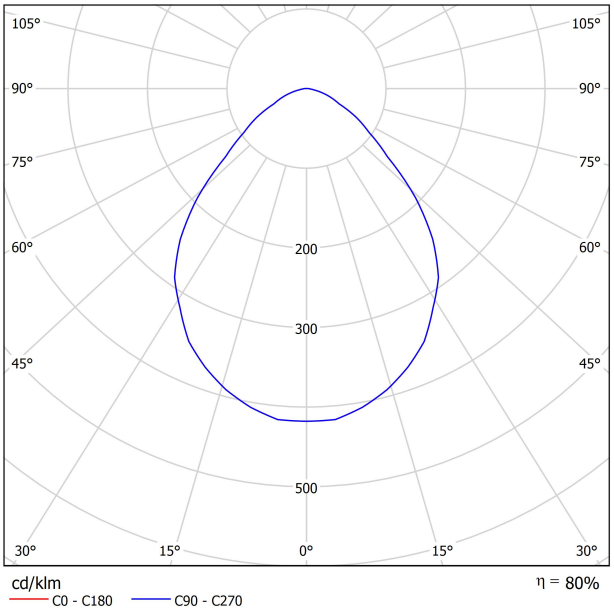

CONICAL DIAGRAM

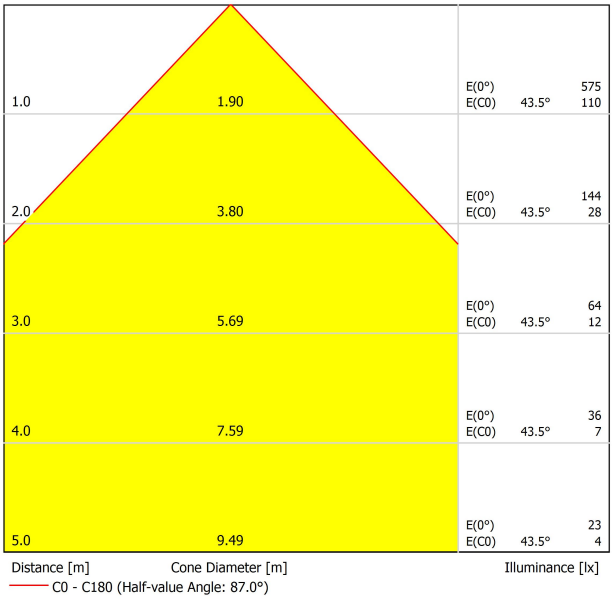

UGR

Glare Evaluation According to UGR

ρ Ceiling		70	70	50	50	30	70	70	50	50	30
ρ Walls		50	30	50	30	30	50	30	50	30	30
ρ Floor		20	20	20	20	20	20	20	20	20	20
Room Size X	Y	Viewing direction at right angles to lamp axis					Viewing direction parallel to lamp axis				
2H	2H	22.7	23.8	23.0	24.0	24.2	22.7	23.8	23.0	24.0	24.2
	3H	23.6	24.6	23.9	24.8	25.1	23.6	24.6	23.9	24.8	25.1
	4H	23.9	24.8	24.3	25.1	25.4	23.9	24.8	24.3	25.1	25.4
	6H	24.1	24.9	24.4	25.2	25.5	24.1	24.9	24.4	25.2	25.5
	8H	24.1	24.9	24.5	25.2	25.5	24.1	24.9	24.5	25.2	25.5
	12H	24.1	24.9	24.5	25.2	25.5	24.1	24.9	24.5	25.2	25.5
4H	2H	22.9	23.9	23.3	24.1	24.4	22.9	23.9	23.3	24.1	24.4
	3H	24.1	24.8	24.4	25.2	25.5	24.1	24.8	24.4	25.2	25.5
	4H	24.5	25.2	24.9	25.5	25.9	24.5	25.2	24.9	25.5	25.9
	6H	24.7	25.3	25.2	25.7	26.1	24.7	25.3	25.2	25.7	26.1
	8H	24.8	25.3	25.2	25.7	26.1	24.8	25.3	25.2	25.7	26.1
	12H	24.8	25.3	25.3	25.7	26.2	24.8	25.3	25.3	25.7	26.2
8H	4H	24.6	25.2	25.1	25.6	26.0	24.6	25.2	25.1	25.6	26.0
	6H	24.9	25.4	25.4	25.8	26.2	24.9	25.4	25.4	25.8	26.2
	8H	25.0	25.4	25.5	25.9	26.3	25.0	25.4	25.5	25.9	26.3
	12H	25.1	25.4	25.6	25.9	26.4	25.1	25.4	25.6	25.9	26.4
12H	4H	24.6	25.1	25.1	25.5	25.9	24.6	25.1	25.1	25.5	25.9
	6H	24.9	25.3	25.4	25.8	26.2	24.9	25.3	25.4	25.8	26.2
	8H	25.1	25.4	25.5	25.8	26.3	25.1	25.4	25.5	25.8	26.3
Variation of the observer position for the luminaire distances S											
S = 1.0H S = 1.5H S = 2.0H		+0.5 / -0.7 +1.0 / -1.4 +2.1 / -2.2					+0.5 / -0.7 +1.0 / -1.4 +2.1 / -2.2				
Standard table		BK03					BK03				
Correction Summand		6.4					6.4				
Corrected Glare Indices referring to 1375lm Total Luminous Flux											