Puck

ARKOSLIGHT

	PRODUCT
Name	PUCK M UL 3500K WT
Reference	U2511003WT
Color	Textured white
RAL	9016
Category	SURFACE

	MOUNTING ACCESSORY / DRIVER
Mounting Accessory / Driver	Mandatory, not included. See next page
Model	REMOTE BOX 8-20W 500mA
Reference	U1000116

DIMENSIONS

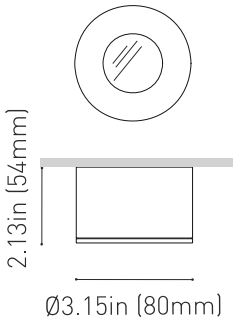

	LIGHT SOURCE
Type	LED
Gross luminous flux	1220 Lm
Color temperature	3500 K
Chromatic stability	MacAdam Step 2
Color Rendering Index	CRI>90
Power	9 W
Current	500 mA
Efficacy	135 Lm/W
LED lifespan	L80B10>60.000h

	LIGHTING FIXTURE | PHOTOMETRIC DATA
Lighting efficiency	75%
Delivered luminous flux	915 Lm
Light beam angle	44°

	LIGHTING FIXTURE | ELECTRICAL DATA
Power values of the system	11.5 W
Voltage	120-277 V
Frequency	50/60 Hz
Dimming	0-10V

	OTHER DATA
IC Rated	Yes
Environmental location	DAMP
Weight	0.606 lb | 275 gr
Packaged weight	0.706 lb | 320 gr
Packaging dimensions	4.41 x 3.94 x 2.36 in | 112 x 100 x 60 mm
Materials	Aluminium / Optical Glass

Awards

Intertek

Puck is a luminary that –for its function, opening angle and luminous flux- manages to embody, in a surface piece, the performance of the classic recessed luminaries with dichroic lamps. Puck is designed to undertake general lighting functions and, moreover, given its ultra-compact format, aims to conserve discretion in those places where it is impossible to recess the appliances in the ceiling.

Calle N, s/n - Pol. Ind. El Oliveral
46394 Ribarroja del Turia - Valencia (Spain)
info@arkoslight.com - www.arkoslight.com

5 Year GUARANTEE*

Mounting Accessory / Driver

ARKOSLIGHT

Mandatory / Not Included

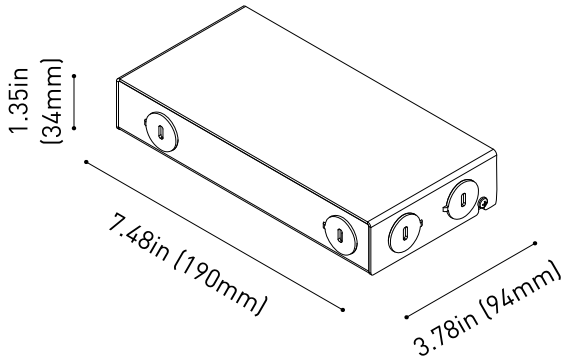

	PRODUCT
Model	REMOTE BOX 8-20W 500mA
Driver	Included
Reference	U1000116
IC Rated	Yes
Dimming	0-10V
Size	7.48 x 3.78 x 1.35 in | 190 x 94 x 34 mm
Weight	1.89 lb | 860 gr
Packaged weight	2.01 lb | 915 gr
Packaging dimensions	9.53 x 4.13 x 1.54 in | 242 x 105 x 39 mm
Nº Luminaires	1 to 2
LED - Driver Distance	18 AWG - 447 ft (350 mA) / 224 ft (700 mA) 16 AWG - 711 ft (350 mA) / 356 ft (700 mA) 14 AWG - 1132 ft (350 mA) / 566 ft (700 mA)

	INPUT CHARACTERISTICS
Input Voltage	120-277 V
Frequency	50/60 Hz

	OUTPUT CHARACTERISTICS
Output Voltage	16 - 40 V
Output Current	500 mA
Output Power	8 - 20 W

Intertek

Calle N, s/n - Pol. Ind. El Oliveral
46394 Ribarroja del Turia - Valencia (Spain)
info@arkoslight.com - www.arkoslight.com

5 Year GUARANTEE*

Lighting Technical Data

ARKOSLIGHT

POLAR DIAGRAM

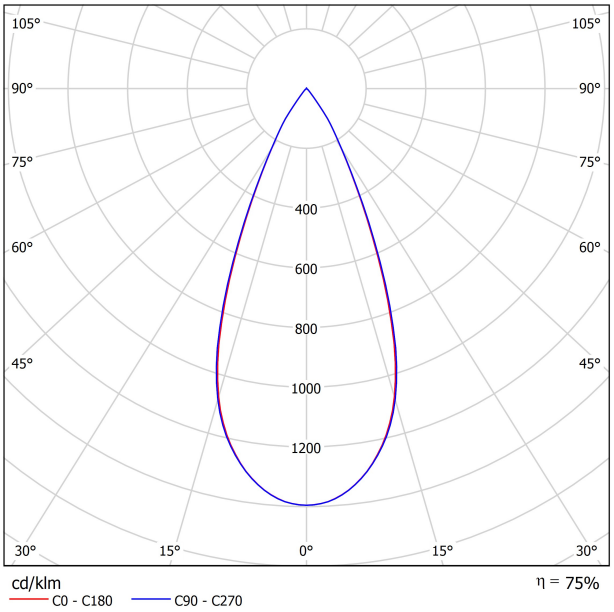

CONICAL DIAGRAM

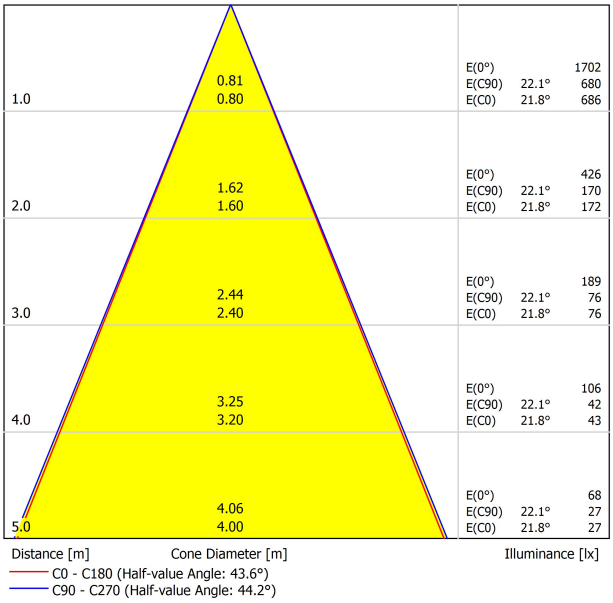

UGR

Glare Evaluation According to UGR

ρ Ceiling		70	70	50	50	30	70	70	50	50	30
ρ Walls		50	30	50	30	30	50	30	50	30	30
ρ Floor		20	20	20	20	20	20	20	20	20	20
Room Size X	Y	Viewing direction at right angles to lamp axis					Viewing direction parallel to lamp axis				
2H	2H	-0.0	0.6	0.2	0.8	1.0	-0.1	0.6	0.2	0.8	1.0
	3H	0.1	0.7	0.4	0.9	1.1	0.0	0.6	0.3	0.9	1.1
	4H	0.2	0.8	0.5	1.0	1.3	0.2	0.7	0.5	1.0	1.2
	6H	0.4	0.9	0.7	1.1	1.4	0.3	0.8	0.6	1.1	1.4
	8H	0.4	0.9	0.8	1.2	1.5	0.4	0.9	0.7	1.2	1.4
	12H	0.5	0.9	0.8	1.2	1.6	0.4	0.9	0.8	1.2	1.5
4H	2H	-0.1	0.5	0.2	0.7	1.0	-0.1	0.4	0.2	0.7	0.9
	3H	0.1	0.6	0.4	0.9	1.2	0.0	0.5	0.4	0.8	1.1
	4H	0.3	0.7	0.7	1.1	1.4	0.3	0.7	0.6	1.0	1.3
	6H	0.6	0.9	1.0	1.3	1.7	0.5	0.8	0.9	1.2	1.6
	8H	0.7	1.0	1.1	1.4	1.8	0.7	0.9	1.1	1.3	1.7
	12H	0.8	1.1	1.3	1.5	1.9	0.8	1.0	1.2	1.4	1.9
8H	4H	0.4	0.6	0.8	1.0	1.4	0.3	0.6	0.7	1.0	1.4
	6H	0.7	0.9	1.2	1.4	1.8	0.7	0.9	1.1	1.3	1.7
	8H	0.9	1.1	1.4	1.5	2.0	0.9	1.0	1.3	1.5	1.9
	12H	1.1	1.2	1.6	1.7	2.2	1.1	1.2	1.6	1.7	2.2
12H	4H	0.4	0.6	0.8	1.0	1.4	0.3	0.5	0.7	0.9	1.4
	6H	0.7	0.9	1.2	1.4	1.8	0.7	0.9	1.1	1.3	1.8
	8H	1.0	1.1	1.4	1.6	2.0	0.9	1.1	1.4	1.5	2.0
Variation of the observer position for the luminaire distances S											
S = 1.0H S = 1.5H S = 2.0H		+5.8 / -9.8 +8.6 / -13.6 +10.6 / -14.6					+5.8 / -9.8 +8.6 / -13.6 +10.6 / -14.6				
Standard table		BK00					BK00				
Correction Summand		-7.3					-7.2				
Corrected Glare Indices referring to 1220lm Total Luminous Flux											