# Io Surface

ARKOSLIGHT

| | PRODUCT |
|---|---|
| Name | IO SURFACE UL 30º 3000K WT |
| Reference | U2630121WT |
| Color | Textured white |
| RAL | 9016 |
| Category | SURFACE |

| | MOUNTING ACCESSORY / DRIVER |
|---|---|
| Mounting Accessory / Driver | Mandatory, not included. See next page |
| Model | REMOTE BOX 4-23W 500mA |
| Reference | U1000035 |

| | LIGHT SOURCE |
|---|---|
| Type | LED |
| Gross luminous flux | 505 Lm |
| Color temperature | 3000 K |
| Chromatic stability | MacAdam Step 2 |
| Color Rendering Index | CRI>90 |
| Power | 4.5 W |
| Current | 500 mA |
| Efficacy | 112 Lm/W |
| LED lifespan | L90B10>55.000h |

| | LIGHTING FIXTURE \| PHOTOMETRIC DATA |
|---|---|
| Lighting efficiency | 89% |
| Delivered luminous flux | 449 Lm |
| Light beam angle | 30 |

| | LIGHTING FIXTURE \| ELECTRICAL DATA |
|---|---|
| Power values of the system | 6 W |
| Voltage | 120-277 V |
| Frequency | 50/60 Hz |
| Dimming | 0-10V |

| | OTHER DATA |
|---|---|
| IC Rated | Yes |
| Environmental location | DAMP |

## DIMENSIONS

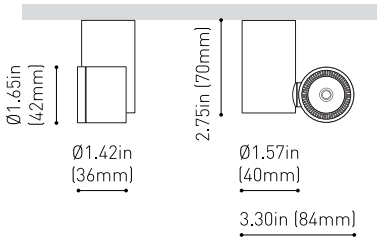


## Accessories

BEAM MIXER DIFFUSER

ANTI-GLARE HONEYCOMB LOUVER

## Awards

Silver Delta ADI Awards 2016

DESIGN AWARD 2017

PREMIO ADCV 2017 ORO

GOOD DESIGN

iO is a LED spotlight miniaturised in a fixture that is so small that it fits on the palm of your hand. Designed for accent lighting applications, its small dimensions mean it can be fitted in display cabinets, shop windows and small places without generating an invasive presence on the scene.

Calle N, s/n - Pol. Ind. El Oliveral
46394 Ribarroja del Turia - Valencia (Spain)
info@arkoslight.com - www.arkoslight.com



5 Year GUARANTEE*

# Io Surface

ARKOSLIGHT

| | OTHER DATA |
|---|---|
| Swivel angle | 325° |
| Rotation angle | 355° |
| Weight | 0.286 lb \| 130 gr |
| Packaged weight | 0.386 lb \| 175.2 gr |
| Packaging dimensions | 4.56 x 4.09 x 2.08 in \| 116 x 104 x 53 mm |
| Materials | Aluminium - Polycarbonate |

Intertek

## DIMENSIONS

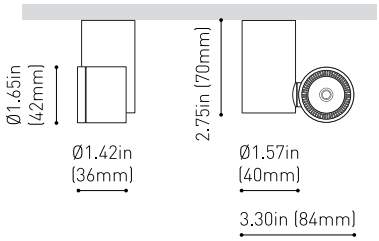


## Accessories

BEAM MIXER DIFFUSER

ANTI-GLARE HONEYCOMB LOUVER

## Awards

Silver Delta
ADI Awards
2016

DESIGN
AWARD
2017

PREMIO
ADCV 2017
ORO

GOOD
DESIGN

iO is a LED spotlight miniaturised in a fixture that is so small that it fits on the palm of your hand. Designed for accent lighting applications, its small dimensions mean it can be fitted in display cabinets, shop windows and small places without generating an invasive presence on the scene.

Calle N, s/n - Pol. Ind. El Oliveral
46394 Ribarroja del Turia - Valencia (Spain)
info@arkoslight.com - www.arkoslight.com



5 Year GUARANTEE*

# Mounting Accessory / Driver

ARKOSLIGHT

## Mandatory / Not Included

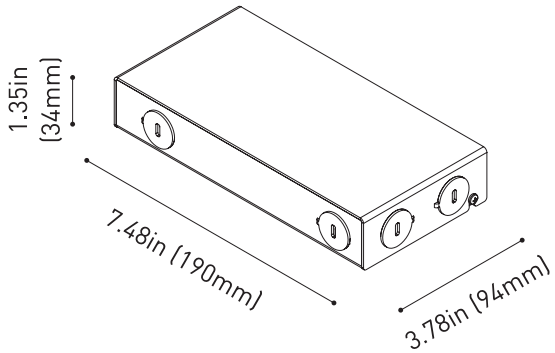


| | PRODUCT |
|---|---|
| **Model** | REMOTE BOX 4-23W 500mA |
| **Driver** | Included |
| **Reference** | U1000035 |
| **IC Rated** | Yes |
| **Dimming** | 0-10V |
| **Size** | 7.48 x 3.78 x 1.35 in \| 190 x 94 x 34 mm |
| **Weight** | 1.8 lb \| 820 gr |
| **Packaged weight** | 1.93 lb \| 875 gr |
| **Packaging dimensions** | 9.53 x 4.13 x 1.54 in \| 242 x 105 x 39 mm |
| **Nº Luminaires** | 1 to 5 |
| **LED - Driver Distance** | Maximum suggested distance is 16 feet |

| | INPUT CHARACTERISTICS |
|---|---|
| **Input Voltage** | 120-277 V |
| **Frequency** | 50/60 Hz |

| | OUTPUT CHARACTERISTICS |
|---|---|
| **Output Voltage** | 8 - 46 V |
| **Output Current** | 500 mA |
| **Output Power** | 4 - 23 W |

Intertek

Calle N, s/n - Pol. Ind. El Oliveral
46394 Ribarroja del Turia - Valencia (Spain)
info@arkoslight.com - www.arkoslight.com



5 Year GUARANTEE*

# Wiring Diagram

ARKOSLIGHT

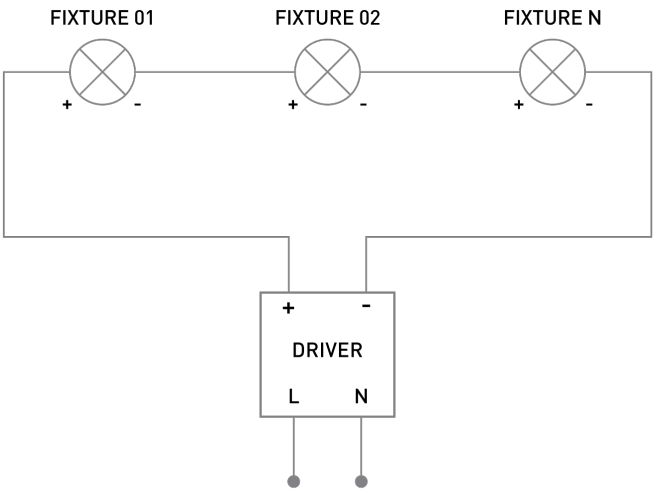


SERIAL CONNECTION FOR SEVERAL FIXTURES TO A SINGLE CONSTANT CURRENT DRIVER
RESPECT THE DISTANCE LED - DRIVER

Calle N, s/n - Pol. Ind. El Oliveral
46394 Ribarroja del Turia - Valencia (Spain)
info@arkoslight.com - www.arkoslight.com



5 Year GUARANTEE*

# Lighting Technical Data

ARKOSLIGHT

POLAR DIAGRAM

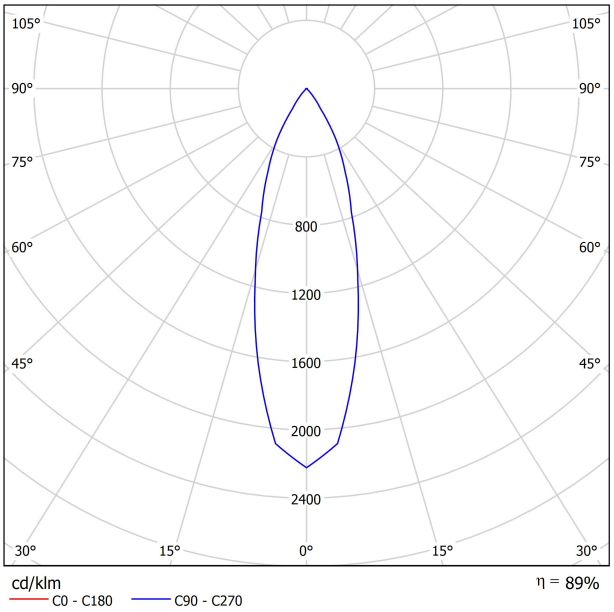


CONICAL DIAGRAM

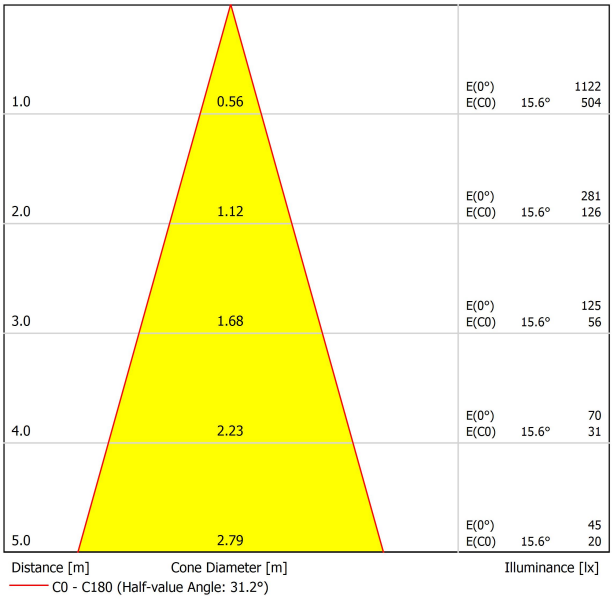

# BEAM MIXER DIFFUSER

JOKERLIGHT®

| | PRODUCT |
|---|---|
| Model | Beam Mixer Diffuser |
| Reference | 0805-01-00 |
| Category | Accessories |

NOT SOLD SEPARATELY
AFFECTS THE LIGHTING PARAMETERS

The Beam Mixer Diffuser is used to smooth beam artifacts caused by parabolic, Fresnel, or TIR lens collimators without significant broadening.

The unique mixing design provides superior far-field smoothing and color mixing with high on-axis brightness. Compared with traditional diffusers, it maintains higher central beam candlepower (CBCP), and produce less undesirable "field light" at higher angles.

JOKERLIGHT LLC
2750 NW 84th Ave · Doral · FL 33122 (USA)
info@jokerlight.com · www.jokerlight.com

5 Year WARRANTY*

# ANTI-GLARE HONEYCOMB LOUVER

JOKERLIGHT®

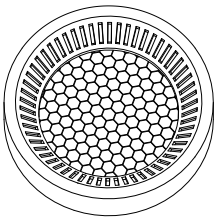

| | PRODUCT |
|---|---|
| Model | Anti-glare Honeycomb Louver |
| Reference | 0806-00-00 \| WT \| NT \| |
| Colour | **WT** ☐ Textured white \| **NT** ■ Textured black |
| Category | Accessories |

NOT SOLD SEPARATELY
AFFECTS THE LIGHTING PARAMETERS

Accessory made up of louver in the shape of a honeycomb panel to reduce glare and the effects of direct rays of vision.

JOKERLIGHT LLC
2750 NW 84th Ave · Doral · FL 33122 (USA)
info@jokerlight.com · www.jokerlight.com

5 Year WARRANTY*