Io Surface

ARKOSLIGHT

PRODUCT

Name	IO SURFACE UL 56º 3000K WT
Reference	U2630131WT
Color	Textured white
RAL	9016
Category	SURFACE

MOUNTING ACCESSORY / DRIVER

Mounting Accessory / Driver	Mandatory, not included. See next page
Model	REMOTE BOX 4-23W 500mA
Reference	U1000035

LIGHT SOURCE

Type	LED
Gross luminous flux	505 Lm
Color temperature	3000 K
Chromatic stability	MacAdam Step 2
Color Rendering Index	CRI>90
Power	4.5 W
Current	500 mA
Efficacy	112 Lm/W
LED lifespan	L90B10>55.000h

LIGHTING FIXTURE | PHOTOMETRIC DATA

Lighting efficiency	86%
Delivered luminous flux	434 Lm
Light beam angle	56

LIGHTING FIXTURE | ELECTRICAL DATA

Power values of the system	6 W
Voltage	120-277 V
Frequency	50/60 Hz
Dimming	0-10V

OTHER DATA

IC Rated	Yes
Environmental location	DAMP

DIMENSIONS

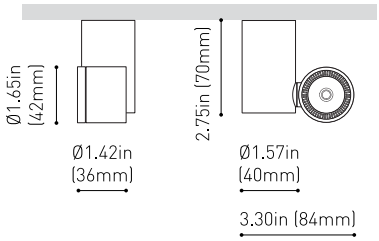

Accessories

BEAM MIXER DIFFUSER

ANTI-GLARE HONEYCOMB LOUVER

Awards

Silver Delta ADI Awards 2016

DESIGN AWARD 2017

PREMIO ADCV 2017 ORO

GOOD DESIGN

iO is a LED spotlight miniaturised in a fixture that is so small that it fits on the palm of your hand. Designed for accent lighting applications, its small dimensions mean it can be fitted in display cabinets, shop windows and small places without generating an invasive presence on the scene.

Calle N, s/n - Pol. Ind. El Oliveral
46394 Ribarroja del Turia - Valencia (Spain)
info@arkoslight.com - www.arkoslight.com

5 Year GUARANTEE*

Io Surface

ARKOSLIGHT

	OTHER DATA
Swivel angle	325°
Rotation angle	355°
Weight	0.286 lb | 130 gr
Packaged weight	0.386 lb | 175.2 gr
Packaging dimensions	4.56 x 4.09 x 2.08 in | 116 x 104 x 53 mm
Materials	Aluminium - Polycarbonate

DIMENSIONS

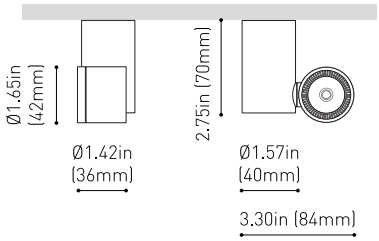

Accessories

BEAM MIXER DIFFUSER

ANTI-GLARE HONEYCOMB LOUVER

Awards

Silver Delta
ADI Awards
2016

DESIGN
AWARD
2017

PREMIO
ADCV 2017
ORO

GOOD
DESIGN

iO is a LED spotlight miniaturised in a fixture that is so small that it fits on the palm of your hand. Designed for accent lighting applications, its small dimensions mean it can be fitted in display cabinets, shop windows and small places without generating an invasive presence on the scene.

Calle N, s/n - Pol. Ind. El Oliveral
46394 Ribarroja del Turia - Valencia (Spain)
info@arkoslight.com - www.arkoslight.com

5 Year GUARANTEE*

Mounting Accessory / Driver

ARKOSLIGHT

Mandatory / Not Included

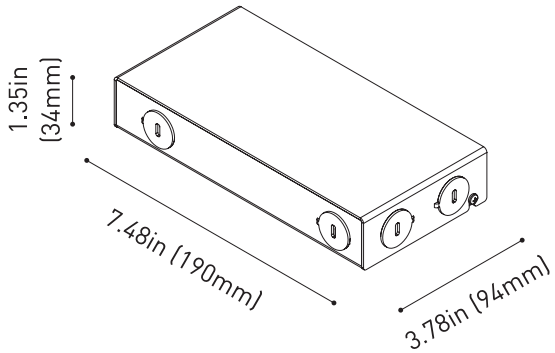

	PRODUCT
Model	REMOTE BOX 4-23W 500mA
Driver	Included
Reference	U1000035
IC Rated	Yes
Dimming	0-10V
Size	7.48 x 3.78 x 1.35 in | 190 x 94 x 34 mm
Weight	1.8 lb | 820 gr
Packaged weight	1.93 lb | 875 gr
Packaging dimensions	9.53 x 4.13 x 1.54 in | 242 x 105 x 39 mm
Nº Luminaires	1 to 5
LED - Driver Distance	Maximum suggested distance is 16 feet

	INPUT CHARACTERISTICS
Input Voltage	120-277 V
Frequency	50/60 Hz

	OUTPUT CHARACTERISTICS
Output Voltage	8 - 46 V
Output Current	500 mA
Output Power	4 - 23 W

Intertek

Calle N, s/n - Pol. Ind. El Oliveral
46394 Ribarroja del Turia - Valencia (Spain)
info@arkoslight.com - www.arkoslight.com

5 Year GUARANTEE*

Wiring Diagram

ARKOSLIGHT

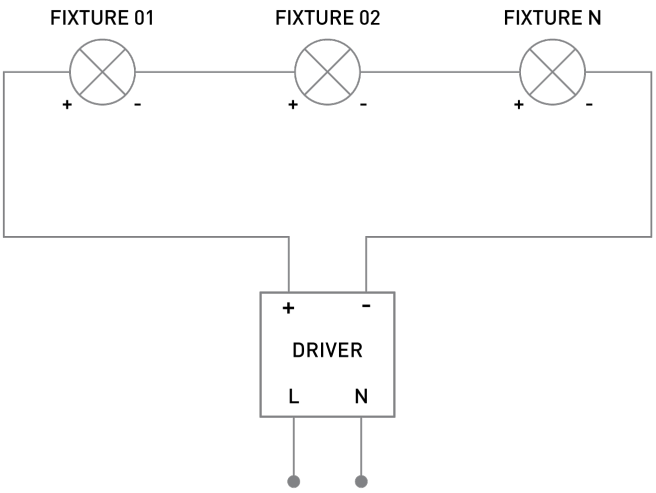

SERIAL CONNECTION FOR SEVERAL FIXTURES TO A SINGLE CONSTANT CURRENT DRIVER
RESPECT THE DISTANCE LED - DRIVER

Calle N, s/n - Pol. Ind. El Oliveral
46394 Ribarroja del Turia - Valencia (Spain)
info@arkoslight.com - www.arkoslight.com

5 Year GUARANTEE*

Lighting Technical Data

ARKOSLIGHT

POLAR DIAGRAM

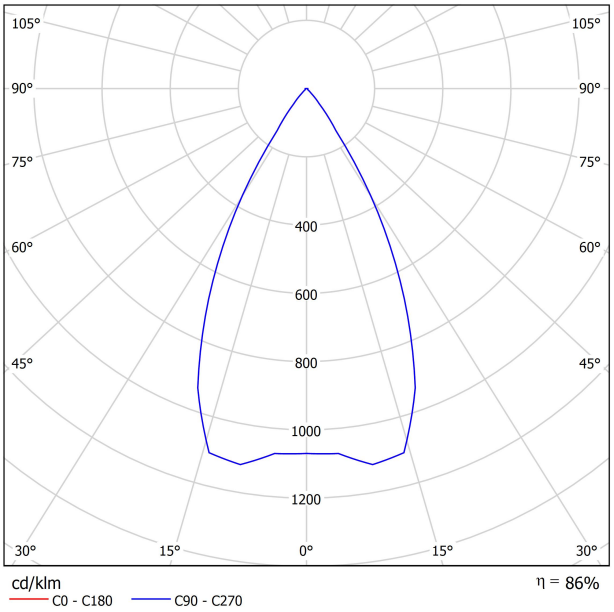

CONICAL DIAGRAM

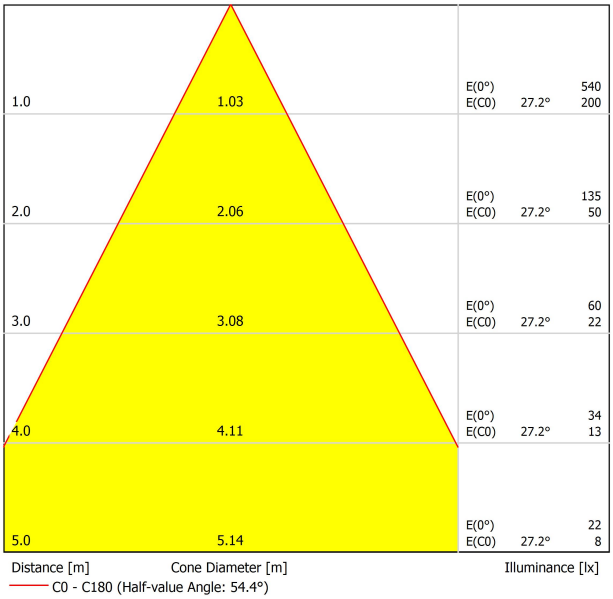

BEAM MIXER DIFFUSER

JOKERLIGHT®

	PRODUCT
Model	Beam Mixer Diffuser
Reference	0805-01-00
Category	Accessories

NOT SOLD SEPARATELY
AFFECTS THE LIGHTING PARAMETERS

The Beam Mixer Diffuser is used to smooth beam artifacts caused by parabolic, Fresnel, or TIR lens collimators without significant broadening.

The unique mixing design provides superior far-field smoothing and color mixing with high on-axis brightness. Compared with traditional diffusers, it maintains higher central beam candlepower (CBCP), and produce less undesirable "field light" at higher angles.

JOKERLIGHT LLC
2750 NW 84th Ave · Doral · FL 33122 (USA)
info@jokerlight.com · www.jokerlight.com

5 Year WARRANTY*

ANTI-GLARE HONEYCOMB LOUVER

JOKERLIGHT®

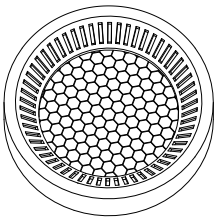

	PRODUCT
Model	Anti-glare Honeycomb Louver
Reference	0806-00-00 | WT | NT |
Colour	**WT** ☐ Textured white | **NT** ■ Textured black
Category	Accessories

NOT SOLD SEPARATELY
AFFECTS THE LIGHTING PARAMETERS

Accessory made up of louver in the shape of a honeycomb panel to reduce glare and the effects of direct rays of vision.

JOKERLIGHT LLC
2750 NW 84th Ave · Doral · FL 33122 (USA)
info@jokerlight.com · www.jokerlight.com

5 Year WARRANTY*