Shot Light

ARKOSLIGHT

	PRODUCT
Name	SHOT LIGHT UL 38º 2700K NMG
Reference	U2681120NMG
Color	Black-Metallized gold
RAL	Paint of metallic nanoparticles
Category	CEILING RECESSED

	MOUNTING ACCESSORY / DRIVER
Mounting Accessory / Driver	Mandatory, not included. See next page
Model	REMOTE BOX 1.4-17W 700mA
Reference	U100003601

DIMENSIONS

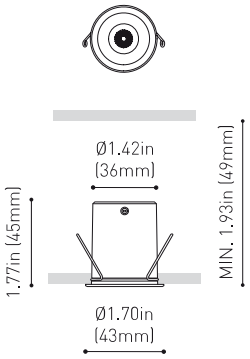

	LIGHT SOURCE
Type	LED
Gross luminous flux	190 Lm
Color temperature	2700 K
Chromatic stability	MacAdam Step 3
Color Rendering Index	CRI>90
Power	2.1 W
Current	700 mA
Efficacy	90 Lm/W
LED lifespan	L90B10>102.000h

	LIGHTING FIXTURE | PHOTOMETRIC DATA
Lighting efficiency	92%
Delivered luminous flux	175 Lm
Light beam angle	38

	LIGHTING FIXTURE | ELECTRICAL DATA
Power values of the system	3.8 W
Voltage	120-277 V
Frequency	50/60 Hz
Dimming	0-10V

	OTHER DATA
IC Rated	Yes
Environmental location	DAMP

Awards

ICONIC AWARDS 2017 INTERIOR INNOVATION winner

iF DESIGN AWARD 2017

Delta Selection Adi Awards 2018

A luminaire conceived to be a small and discreet point of light in the ceiling, that hides the light source to offer maximum visual comfort. Specifically designed with an anti-glare screen and a micro-reflector, SHOT LIGHT generates a perfectly defined light beam.

Calle N, s/n - Pol. Ind. El Oliveral
46394 Ribarroja del Turia - Valencia (Spain)
info@arkoslight.com - www.arkoslight.com

5 Year GUARANTEE*

Shot Light

ARKOSLIGHT

	OTHER DATA
Recess measurements	Ø1.50 in | Ø38 mm
Weight	0.16 lb | 71 gr
Packaged weight	0.21 lb | 96 gr
Packaging dimensions	3.03 x 2.75 x 2.08 in | 77 x 70 x 53 mm
Materials	Aluminium - Acrylonitrile Butadiene Styrene - Polycarbonate

Intertek

DIMENSIONS

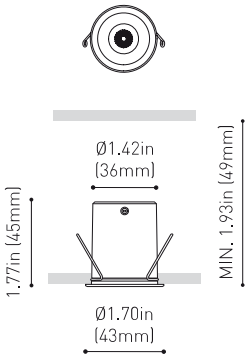

Awards

Delta Selection
Adi Awards
2018

A luminaire conceived to be a small and discreet point of light in the ceiling, that hides the light source to offer maximum visual comfort. Specifically designed with an anti-glare screen and a micro-reflector, SHOT LIGHT generates a perfectly defined light beam.

Calle N, s/n - Pol. Ind. El Oliveral
46394 Ribarroja del Turia - Valencia (Spain)
info@arkoslight.com - www.arkoslight.com

5 Year GUARANTEE*

Mounting Accessory / Driver

ARKOSLIGHT

Mandatory / Not Included

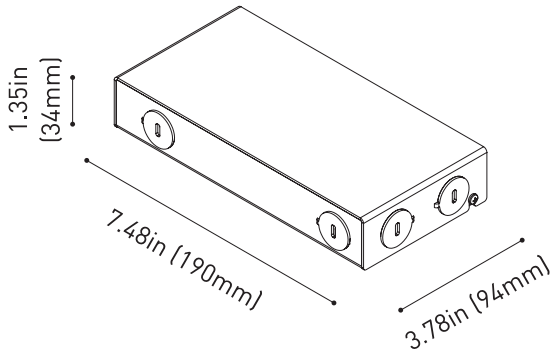

	PRODUCT
Model	REMOTE BOX 1.4-17W 700mA
Driver	Included
Reference	U100003601
IC Rated	Yes
Dimming	0-10V
Size	7.48 x 3.78 x 1.35 in | 190 x 94 x 34 mm
Weight	1.9 lb | 860 gr
Packaged weight	2.02 lb | 865 gr
Packaging dimensions	9.53 x 4.13 x 1.54 in | 242 x 105 x 39 mm
Nº Luminaires	1 to 8
LED - Driver Distance	20AWG - 46ft 19AWG - 59ft 18AWG - 72ft 17AWG - 92ft 16AWG - 118ft

	INPUT CHARACTERISTICS
Input Voltage	120-277 V
Frequency	50/60 Hz

	OUTPUT CHARACTERISTICS
Output Voltage	2 - 24 V
Output Current	700 mA
Output Power	1.4 - 17 W

Intertek

Calle N, s/n - Pol. Ind. El Oliveral
46394 Ribarroja del Turia - Valencia (Spain)
info@arkoslight.com - www.arkoslight.com

5 Year GUARANTEE*

Wiring Diagram

ARKOSLIGHT

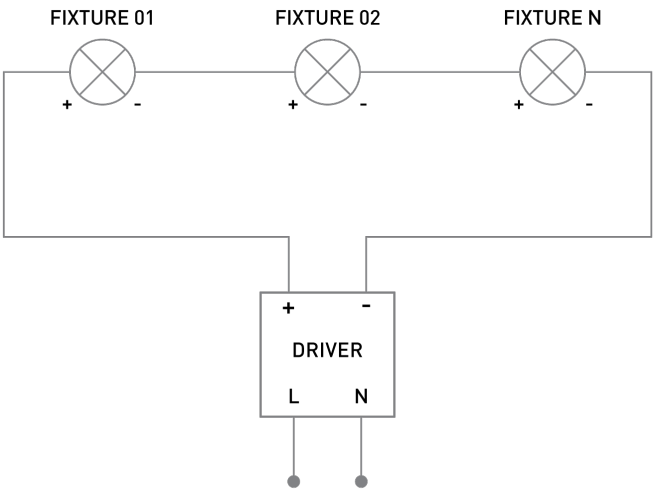

SERIAL CONNECTION FOR SEVERAL FIXTURES TO A SINGLE CONSTANT CURRENT DRIVER
RESPECT THE DISTANCE LED - DRIVER

Lighting Technical Data

ARKOSLIGHT

POLAR DIAGRAM

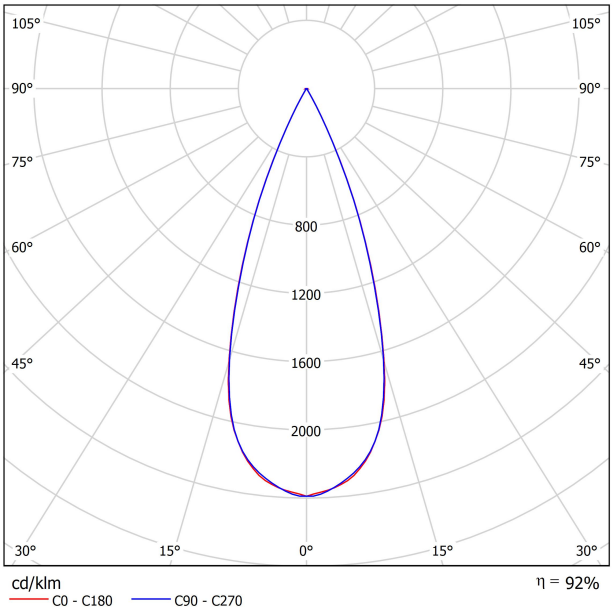

CONICAL DIAGRAM

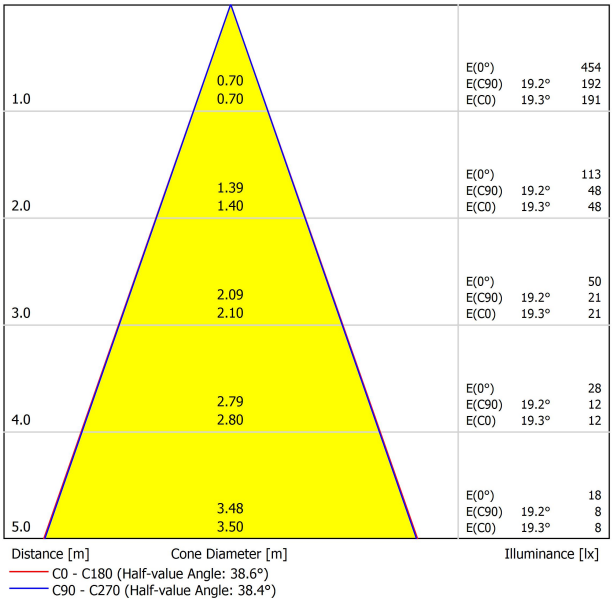

UGR

Glare Evaluation According to UGR

ρ Ceiling		70	70	50	50	30	70	70	50	50	30
ρ Walls		50	30	50	30	30	50	30	50	30	30
ρ Floor		20	20	20	20	20	20	20	20	20	20
Room Size X	Y	Viewing direction at right angles to lamp axis					Viewing direction parallel to lamp axis				
2H	2H	-4.9	-4.2	-4.6	-4.0	-3.8	-4.7	-4.1	-4.5	-3.9	-3.7
	3H	-1.1	-0.5	-0.8	-0.3	-0.0	-1.3	-0.7	-1.0	-0.4	-0.2
	4H	0.7	1.3	1.0	1.5	1.8	0.8	1.4	1.1	1.6	1.9
	6H	2.9	3.4	3.2	3.6	3.9	3.2	3.7	3.5	3.9	4.2
	8H	4.2	4.7	4.5	5.0	5.2	4.3	4.8	4.7	5.1	5.4
	12H	5.5	6.0	5.9	6.3	6.6	5.7	6.1	6.0	6.4	6.7
4H	2H	-3.7	-3.2	-3.4	-2.9	-2.7	-3.6	-3.1	-3.3	-2.8	-2.6
	3H	0.1	0.6	0.5	0.9	1.2	0.2	0.6	0.5	0.9	1.2
	4H	2.2	2.6	2.5	2.9	3.2	2.4	2.8	2.7	3.1	3.4
	6H	4.5	4.8	4.9	5.2	5.6	4.8	5.2	5.2	5.5	5.9
	8H	5.9	6.2	6.3	6.6	7.0	6.1	6.4	6.5	6.8	7.2
	12H	7.4	7.6	7.8	8.0	8.4	7.5	7.8	8.0	8.2	8.6
8H	4H	3.2	3.4	3.6	3.8	4.2	3.3	3.6	3.7	4.0	4.4
	6H	5.7	5.9	6.2	6.3	6.8	5.9	6.1	6.4	6.6	7.0
	8H	7.3	7.4	7.7	7.9	8.3	7.4	7.5	7.8	8.0	8.4
	12H	8.9	9.1	9.4	9.5	10.0	9.0	9.2	9.5	9.6	10.1
12H	4H	3.4	3.7	3.8	4.1	4.5	3.5	3.8	4.0	4.2	4.6
	6H	6.1	6.2	6.5	6.7	7.2	6.3	6.4	6.7	6.9	7.3
	8H	7.7	7.9	8.2	8.3	8.8	7.8	8.0	8.3	8.4	8.9
Variation of the observer position for the luminaire distances S											
S = 1.0H		+0.4 / -0.2					+0.4 / -0.2				
S = 1.5H		+0.9 / -0.5					+0.9 / -0.4				
S = 2.0H		+1.6 / -0.6					+1.6 / -0.6				
Standard table		---					---				
Correction Summand		---					---				
Corrected Glare Indices referring to 190lm Total Luminous Flux											