Pop Up

ARKOSLIGHT

DIMENSIONS

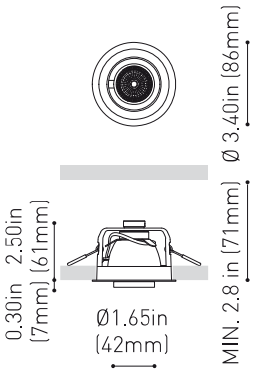

Accessories

BEAM MIXER DIFFUSER

ANTI-GLARE HONEYCOMB LOUVER

OPTIONAL MOUNTING ACCESSORY

Awards

EUROPEAN PRODUCT DESIGN AWARD

	PRODUCT
Name	POP UP UL 20º 2700K WT
Reference	U2782110WT
Color	Textured white
RAL	9016
Category	CEILING RECESSED

	MOUNTING ACCESSORY / DRIVER
Mounting Accessory / Driver	Mandatory, not included. See next page
Model	REMOTE BOX 4-23W 500mA
Reference	U1000035

	LIGHT SOURCE
Type	LED
Gross luminous flux	461 Lm
Color temperature	2700 K
Chromatic stability	MacAdam Step 2
Color Rendering Index	CRI>90
Power	4.5 W
Current	500 mA
Efficacy	102 Lm/W
LED lifespan	L90B10>55.000h

	LIGHTING FIXTURE | PHOTOMETRIC DATA
Lighting efficiency	92%
Delivered luminous flux	424 Lm
Light beam angle	20

	LIGHTING FIXTURE | ELECTRICAL DATA
Power values of the system	6 W
Voltage	120-277 V
Frequency	50/60 Hz
Dimming	0-10V

	OTHER DATA
IC Rated	Yes
Environmental location	DAMP

Pop Up is one of the smallest recessed spotlights in the world. It combines its small format with formal minimalism to achieve the perfect luminaire for projects that require the least possible space invasion. Pop Up is able to render a luminous flux that allows it to undertake accent lighting functions from the ceiling. It can be moved in practically all the degrees of freedom, as it rotates 355° and can tilt at 90° (unlike the majority of other recessables on the market). It can be easily and smoothly moved by hand.

Calle N, s/n - Pol. Ind. El Oliveral
46394 Ribarroja del Turia - Valencia (Spain)
info@arkoslight.com - www.arkoslight.com

5 Year GUARANTEE*

Pop Up

ARKOSLIGHT

	OTHER DATA
Recess measurements	Ø3.10 in | Ø79 mm
Swivel angle	90°
Rotation angle	355°
Weight	0.58 lb | 262 gr
Packaged weight	0.76 lb | 343 gr
Packaging dimensions	6.97x5.51x3.38 in | 177x140x86 mm
Materials	Aluminium / Polycarbonate

Intertek

DIMENSIONS

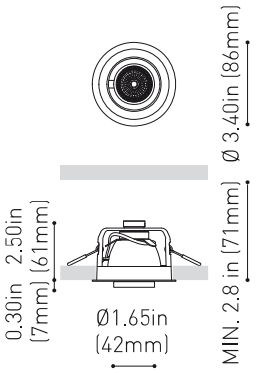

Accessories

BEAM MIXER DIFFUSER

ANTI-GLARE HONEYCOMB LOUVER

OPTIONAL MOUNTING ACCESSORY

Awards

EUROPEAN PRODUCT DESIGN AWARD

Pop Up is one of the smallest recessed spotlights in the world. It combines its small format with formal minimalism to achieve the perfect luminaire for projects that require the least possible space invasion. Pop Up is able to render a luminous flux that allows it to undertake accent lighting functions from the ceiling. It can be moved in practically all the degrees of freedom, as it rotates 355° and can tilt at 90° (unlike the majority of other recessables on the market). It can be easily and smoothly moved by hand.

Calle N, s/n - Pol. Ind. El Oliveral
46394 Ribarroja del Turia - Valencia (Spain)
info@arkoslight.com - www.arkoslight.com

5 Year GUARANTEE*

Mounting Accessory / Driver

ARKOSLIGHT

Mandatory / Not Included

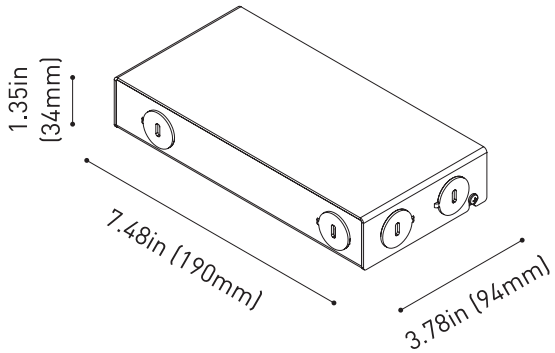

	PRODUCT
Model	REMOTE BOX 4-23W 500mA
Driver	Included
Reference	U1000035
IC Rated	Yes
Dimming	0-10V
Size	7.48 x 3.78 x 1.35 in | 190 x 94 x 34 mm
Weight	1.8 lb | 820 gr
Packaged weight	1.93 lb | 875 gr
Packaging dimensions	9.53 x 4.13 x 1.54 in | 242 x 105 x 39 mm
Nº Luminaires	1 to 5
LED - Driver Distance	Maximum suggested distance is 16 feet

	INPUT CHARACTERISTICS
Input Voltage	120-277 V
Frequency	50/60 Hz

	OUTPUT CHARACTERISTICS
Output Voltage	8 - 46 V
Output Current	500 mA
Output Power	4 - 23 W

Intertek

Calle N, s/n - Pol. Ind. El Oliveral
46394 Ribarroja del Turia - Valencia (Spain)
info@arkoslight.com - www.arkoslight.com

5 Year GUARANTEE*

Wiring Diagram

ARKOSLIGHT

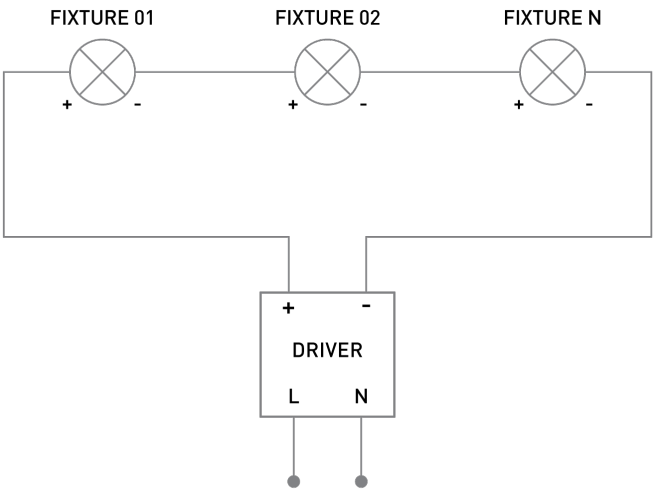

SERIAL CONNECTION FOR SEVERAL FIXTURES TO A SINGLE CONSTANT CURRENT DRIVER
RESPECT THE DISTANCE LED - DRIVER

Calle N, s/n - Pol. Ind. El Oliveral
46394 Ribarroja del Turia - Valencia (Spain)
info@arkoslight.com - www.arkoslight.com

5 Year GUARANTEE*

Lighting Technical Data

ARKOSLIGHT

POLAR DIAGRAM

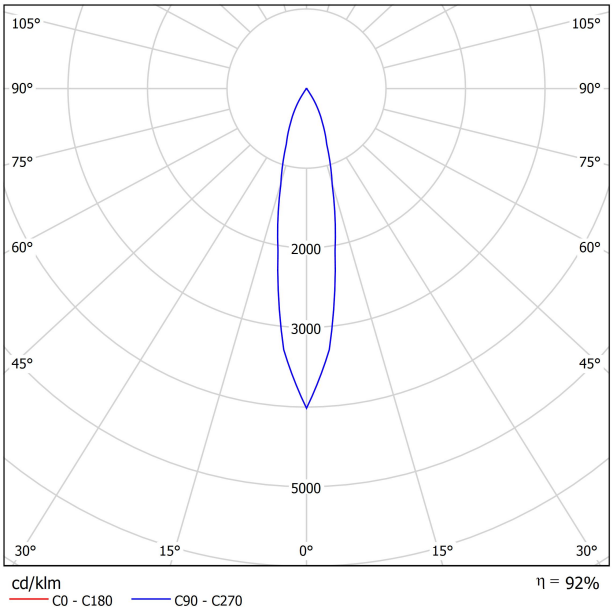

CONICAL DIAGRAM

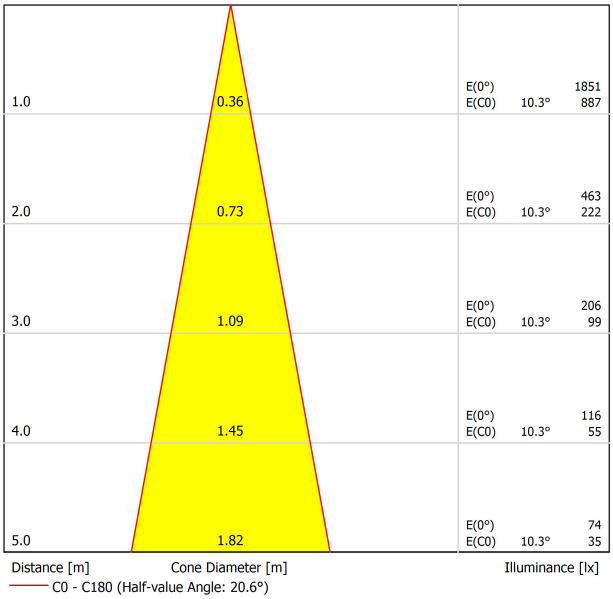

Beam Mixer Diffuser

ARKOSLIGHT

	PRODUCT
Model	Beam Mixer Diffuser
Reference	08050100
Category	Accessories

NOT SOLD SEPARATELY.

Beam Mixer Diffuser

The beam mixer diffuser reduces irregularities and distortions caused by parabolic, Fresnel lenses, or TIR collimators, ensuring a more uniform light distribution without significantly increasing beam length.

Calle N, s/n - Pol. Ind. El Oliveral
46394 Ribarroja del Turia-Valencia (Spain)
info@arkoslight.com - www.arkoslight.com

5 Year GUARANTEE

Anti-glare Honeycomb Louver

ARKOSLIGHT

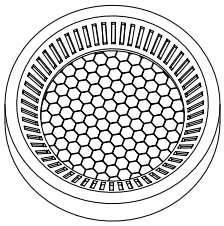

	PRODUCT
Model	Anti-glare Honeycomb Louver
Reference	08060000WT
Colour	**WT** ☐ | Textured white
Category	Accessories

NOT SOLD SEPARATELY.

Anti-glare Honeycomb Louver

Accessory featuring a honeycomb structure designed to control the light beam, reduce glare, and prevent direct exposure to the light source.

Calle N, s/n - Pol. Ind. El Oliveral
46394 Ribarroja del Turia-Valencia (Spain)
info@arkoslight.com - www.arkoslight.com

5Year GUARANTEE

New construction Plaster Frame S

ARKOSLIGHT

Optional mounting accessory

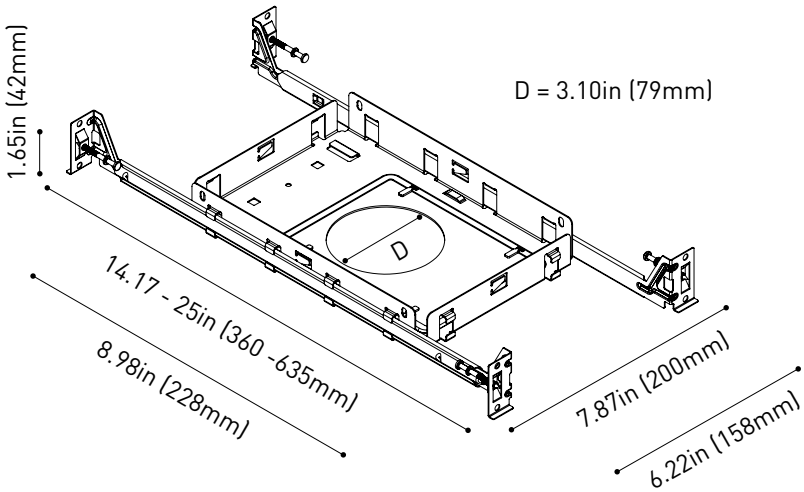

	PRODUCT
Model	NC PLASTER FRAME S Ø79
Reference	U100-01-19
Category	Optional Mounting Accessory
IC Rated	Yes
Weight	1.12 lb | 509 g
Packaged Weight	1.89 lb | 859 g
Packaging Dimensions	16.53x8.93x3.15 in | 420x227x80 mm

TO BE USED WITH REMOTE BOX

Calle N, s/n - Pol. Ind. El Oliveral
46394 Ribarroja del Turia-Valencia (Spain)
info@arkoslight.com - www.arkoslight.com

5Year GUARANTEE