# Holly

ARKOSLIGHT

| | PRODUCT |
|---|---|
| Name | HOLLY UL 2M 38º 3000K NT |
| Reference | U2810011NT |
| Color | Textured black |
| RAL | 9005 |
| Category | SUSPENSION |

| | MOUNTING ACCESSORY / DRIVER |
|---|---|
| Mounting Accessory / Driver | Mandatory, not included. See next page |
| Model | REMOTE BOX 1.4-17W 700mA |
| Reference | U100003601 |

| | LIGHT SOURCE |
|---|---|
| Type | LED |
| Gross luminous flux | 210 Lm |
| Color temperature | 3000 K |
| Chromatic stability | MacAdam Step 3 |
| Color Rendering Index | CRI>90 |
| Power | 2.1 W |
| Current | 700 mA |
| Efficacy | 100 Lm/W |
| LED lifespan | L90B10>102.000h |

| | LIGHTING FIXTURE \| PHOTOMETRIC DATA |
|---|---|
| Lighting efficiency | 92% |
| Delivered luminous flux | 193 Lm |
| Light beam angle | 19 |

| | LIGHTING FIXTURE \| ELECTRICAL DATA |
|---|---|
| Power values of the system | 3.8 W |
| Voltage | 120-277 V |
| Frequency | 50/60 Hz |
| Dimming | 0-10V |

| | OTHER DATA |
|---|---|
| IC Rated | Yes |
| Environmental location | DAMP |

## DIMENSIONS

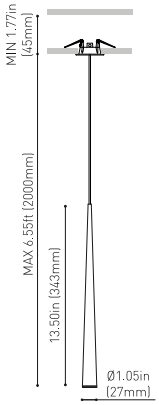


## Accessories

CORD ACCESSORY

HOLLY is a suspension luminaire for accent lighting applications. With a machined aluminium body and a simple yet elegant design HOLLY is made to the highest standards and it's a perfect fit for a decorative installation. Holly is designed to optimize the light beam and to obtain an elevated illuminance in the area where installed.

Calle N, s/n - Pol. Ind. El Oliveral
46394 Ribarroja del Turia - Valencia (Spain)
info@arkoslight.com - www.arkoslight.com



5 Year GUARANTEE*

# Holly

ARKOSLIGHT

| | OTHER DATA |
|---|---|
| Recess measurements | Ø1.97 in \| Ø50 mm |
| Cord Length | 6.55 ft \| 2 m |
| Fast adjustment tensioner | No |
| Weight | 0.575 lb \| 261 gr |
| Packaged weight | 0.86 lb \| 390 gr |
| Packaging dimensions | 15.16 x 4.06 x 3.07 in \| 385 x 103 x 78 mm |
| Materials | Aluminium - Acrylonitrile Butadiene Styrene |

Intertek

## DIMENSIONS

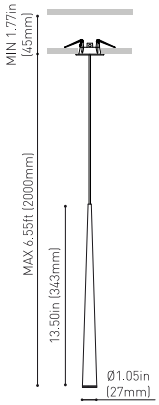


## Accessories

CORD ACCESSORY

HOLLY is a suspension luminaire for accent lighting applications. With a machined aluminium body and a simple yet elegant design HOLLY is made to the highest standards and it´s a perfect fit for a decorative installation. Holly is designed to optimize the light beam and to obtain an elevated illuminance in the area where installed.

Calle N, s/n - Pol. Ind. El Oliveral
46394 Ribarroja del Turia - Valencia (Spain)
info@arkoslight.com - www.arkoslight.com



5 Year GUARANTEE*

# Mounting Accessory / Driver

ARKOSLIGHT

## Mandatory / Not Included

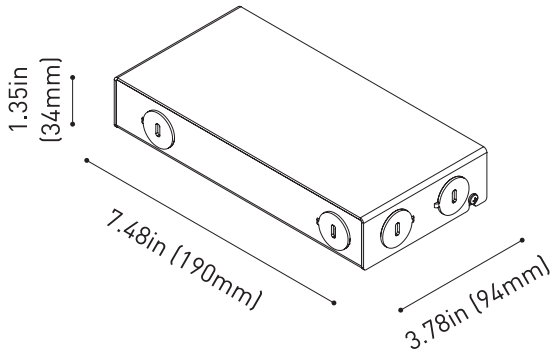


| | PRODUCT |
|---|---|
| Model | REMOTE BOX 1.4-17W 700mA |
| Driver | Included |
| Reference | U100003601 |
| IC Rated | Yes |
| Dimming | 0-10V |
| Size | 7.48 x 3.78 x 1.35 in \| 190 x 94 x 34 mm |
| Weight | 1.9 lb \| 860 gr |
| Packaged weight | 2.02 lb \| 865 gr |
| Packaging dimensions | 9.53 x 4.13 x 1.54 in \| 242 x 105 x 39 mm |
| Nº Luminaires | 1 to 3 |
| LED - Driver Distance | 20AWG - 46ft<br>19AWG - 59ft<br>18AWG - 72ft<br>17AWG - 92ft<br>16AWG - 118ft |

| | INPUT CHARACTERISTICS |
|---|---|
| Input Voltage | 120-277 V |
| Frequency | 50/60 Hz |

| | OUTPUT CHARACTERISTICS |
|---|---|
| Output Voltage | 2 - 24 V |
| Output Current | 700 mA |
| Output Power | 1.4 - 17 W |

Intertek

Calle N, s/n - Pol. Ind. El Oliveral
46394 Ribarroja del Turia - Valencia (Spain)
info@arkoslight.com - www.arkoslight.com



5 Year GUARANTEE*

# Wiring Diagram

ARKOSLIGHT

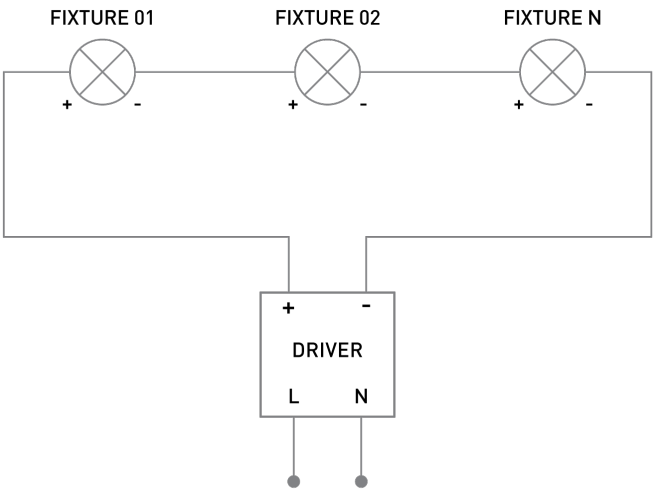


SERIAL CONNECTION FOR SEVERAL FIXTURES TO A SINGLE CONSTANT CURRENT DRIVER
RESPECT THE DISTANCE LED - DRIVER

Calle N, s/n - Pol. Ind. El Oliveral
46394 Ribarroja del Turia - Valencia (Spain)
info@arkoslight.com - www.arkoslight.com



5 Year GUARANTEE*

# Lighting Technical Data

ARKOSLIGHT

## POLAR DIAGRAM

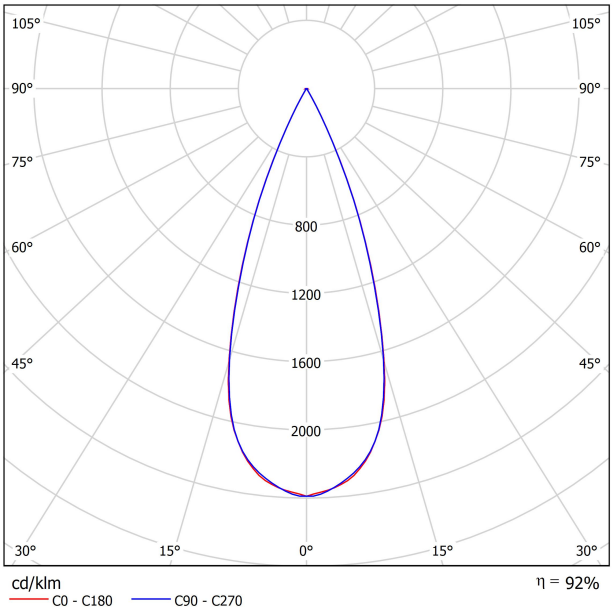


## CONICAL DIAGRAM

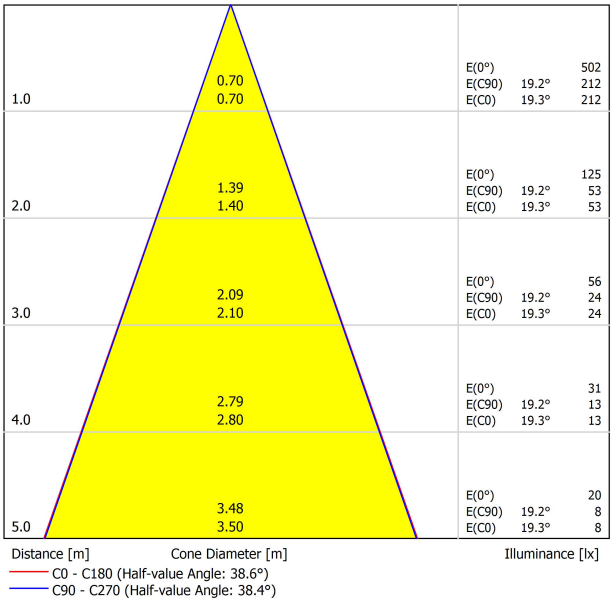

# Cord Accessory

ARKOSLIGHT

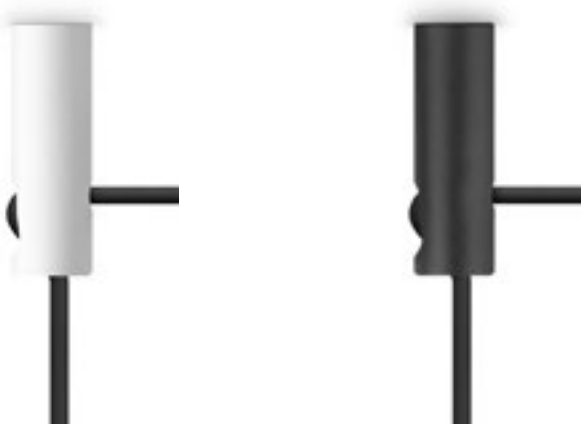

| | PRODUCT |
|---|---|
| Model | Cord Accessory UL |
| Reference | **U223-00-00** \| **W** \| **N** \| |
| Colour | **W** ☐ RAL 9016 \| **N** ■ RAL9005 |
| Category | Accessories |

## Dimmensional drawing

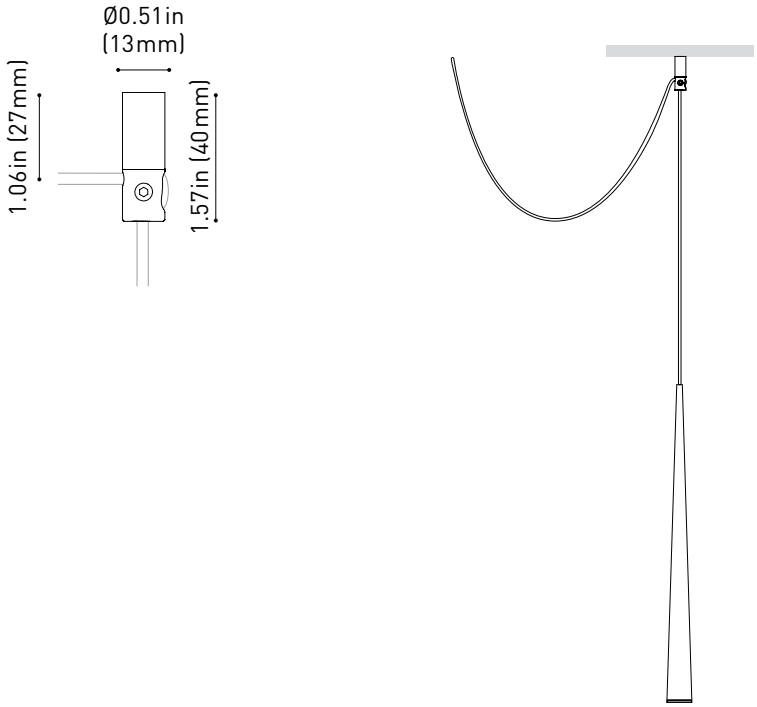


Calle N, s/n - Pol. Ind. El Oliveral
46394 Ribarroja del Turia-Valencia (Spain)
info@arkoslight.com - www.arkoslight.com

5Year GUARANTEE