Holly

ARKOSLIGHT

	PRODUCT
Name	HOLLY UL 5M 19º 3000K WT
Reference	U2812001WT
Color	Textured white
RAL	9016
Category	SUSPENSION

	MOUNTING ACCESSORY / DRIVER
Mounting Accessory / Driver	Mandatory, not included. See next page
Model	REMOTE BOX 1.4-17W 700mA
Reference	U100003601

	LIGHT SOURCE
Type	LED
Gross luminous flux	210 Lm
Color temperature	3000 K
Chromatic stability	MacAdam Step 3
Color Rendering Index	CRI>90
Power	2.1 W
Current	700 mA
Efficacy	100 Lm/W
LED lifespan	L90B10>102.000h

	LIGHTING FIXTURE | PHOTOMETRIC DATA
Lighting efficiency	90%
Delivered luminous flux	189 Lm
Light beam angle	19

	LIGHTING FIXTURE | ELECTRICAL DATA
Power values of the system	3.8 W
Voltage	120-277 V
Frequency	50/60 Hz
Dimming	0-10V

	OTHER DATA
IC Rated	Yes
Environmental location	DAMP

DIMENSIONS

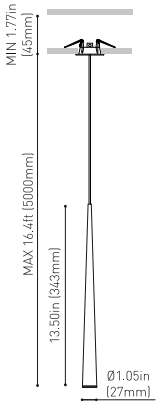

Accessories

CORD ACCESSORY

HOLLY is a suspension luminaire for accent lighting applications. With a machined aluminium body and a simple yet elegant design HOLLY is made to the highest standards and it's a perfect fit for a decorative installation. Holly is designed to optimize the light beam and to obtain an elevated illuminance in the area where installed.

Calle N, s/n - Pol. Ind. El Oliveral
46394 Ribarroja del Turia - Valencia (Spain)
info@arkoslight.com - www.arkoslight.com

5 Year GUARANTEE*

Holly

ARKOSLIGHT

	OTHER DATA
Recess measurements	Ø1.97 in | Ø50 mm
Cord Length	16.4 ft | 5 m
Fast adjustment tensioner	No
Weight	0.575 lb | 261 gr
Packaged weight	0.86 lb | 390 gr
Packaging dimensions	15.16 x 4.06 x 3.07 in | 385 x 103 x 78 mm
Materials	Aluminium - Acrylonitrile Butadiene Styrene

Intertek

DIMENSIONS

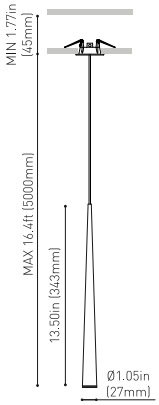

Accessories

CORD ACCESSORY

HOLLY is a suspension luminaire for accent lighting applications. With a machined aluminium body and a simple yet elegant design HOLLY is made to the highest standards and it´s a perfect fit for a decorative installation. Holly is designed to optimize the light beam and to obtain an elevated illuminance in the area where installed.

Calle N, s/n - Pol. Ind. El Oliveral
46394 Ribarroja del Turia - Valencia (Spain)
info@arkoslight.com - www.arkoslight.com

5 Year GUARANTEE*

Mounting Accessory / Driver

ARKOSLIGHT

Mandatory / Not Included

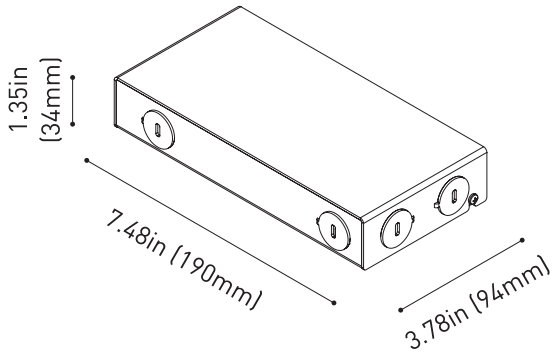

	PRODUCT
Model	REMOTE BOX 1.4-17W 700mA
Driver	Included
Reference	U100003601
IC Rated	Yes
Dimming	0-10V
Size	7.48 x 3.78 x 1.35 in | 190 x 94 x 34 mm
Weight	1.9 lb | 860 gr
Packaged weight	2.02 lb | 865 gr
Packaging dimensions	9.53 x 4.13 x 1.54 in | 242 x 105 x 39 mm
Nº Luminaires	1 to 3
LED - Driver Distance	20AWG - 46ft 19AWG - 59ft 18AWG - 72ft 17AWG - 92ft 16AWG - 118ft

	INPUT CHARACTERISTICS
Input Voltage	120-277 V
Frequency	50/60 Hz

	OUTPUT CHARACTERISTICS
Output Voltage	2 - 24 V
Output Current	700 mA
Output Power	1.4 - 17 W

Intertek

Calle N, s/n - Pol. Ind. El Oliveral
46394 Ribarroja del Turia - Valencia (Spain)
info@arkoslight.com - www.arkoslight.com

5 Year GUARANTEE*

Wiring Diagram

ARKOSLIGHT

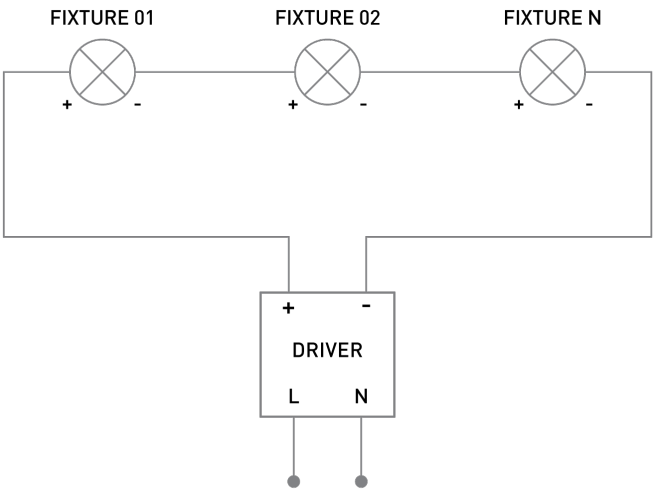

SERIAL CONNECTION FOR SEVERAL FIXTURES TO A SINGLE CONSTANT CURRENT DRIVER
RESPECT THE DISTANCE LED - DRIVER

Lighting Technical Data

ARKOSLIGHT

POLAR DIAGRAM

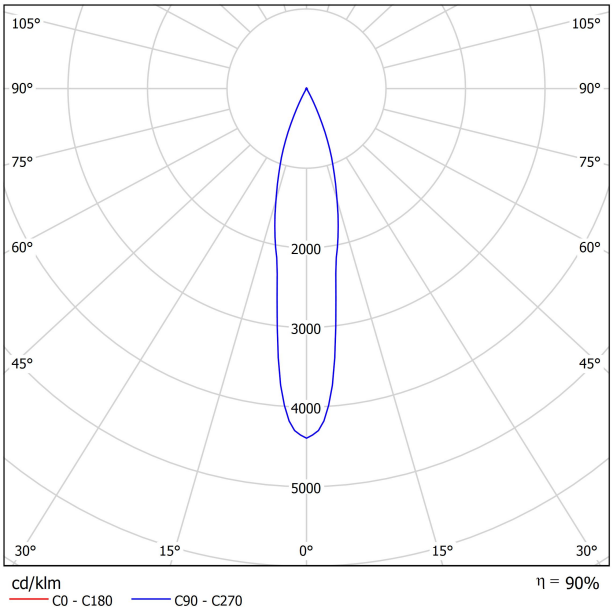

CONICAL DIAGRAM

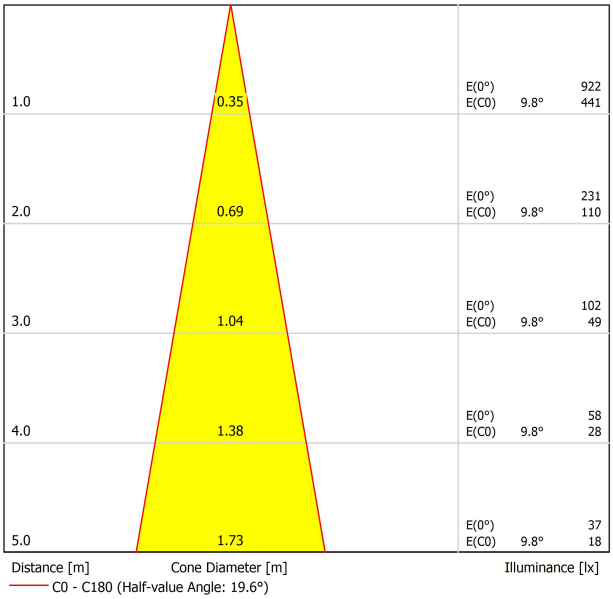

Cord Accessory

ARKOSLIGHT

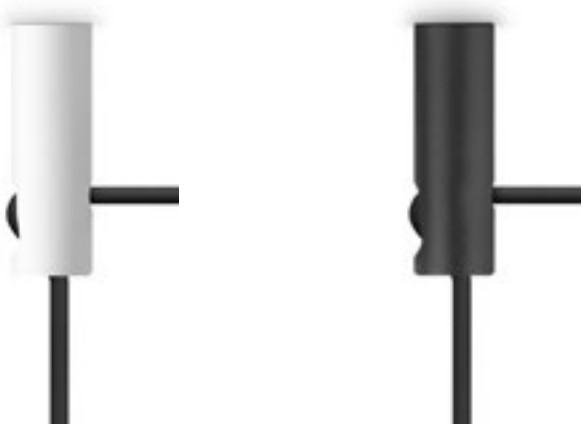

	PRODUCT
Model	Cord Accessory UL
Reference	**U223-00-00** | **W** | **N** |
Colour	**W** ☐ RAL 9016 | **N** ■ RAL9005
Category	Accessories

Dimmensional drawing

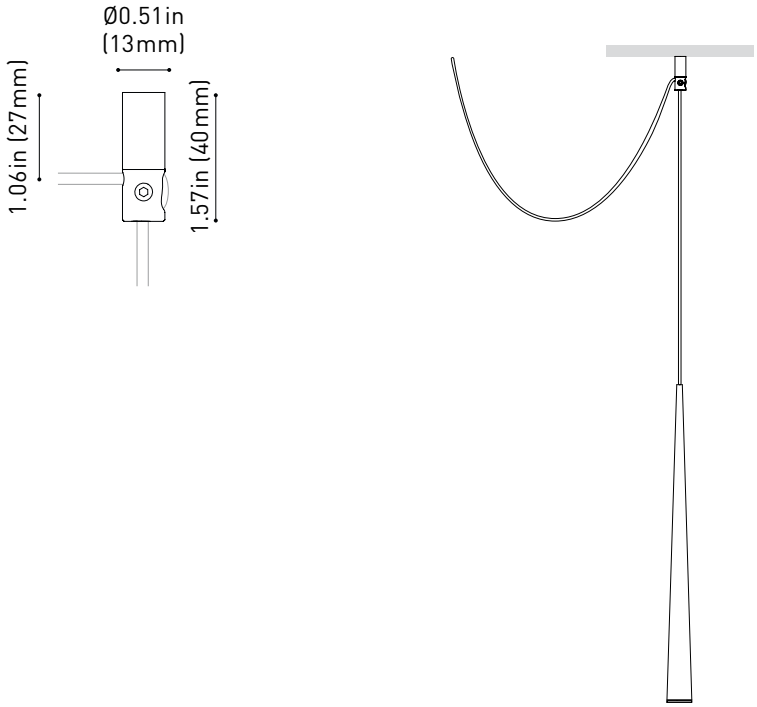

Calle N, s/n - Pol. Ind. El Oliveral
46394 Ribarroja del Turia-Valencia (Spain)
info@arkoslight.com - www.arkoslight.com

5Year GUARANTEE