Art

ARKOSLIGHT

DIMENSIONS

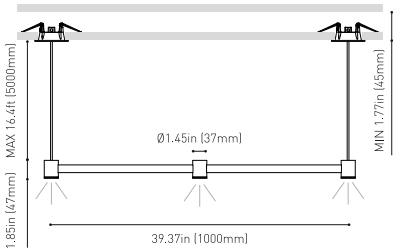

	PRODUCT
Name	ART UL 5M 3000K WT
Reference	U3420011WT
Color	Textured white
RAL	9016
Category	SUSPENSION

	MOUNTING ACCESSORY / DRIVER
Mounting Accessory / Driver	Mandatory, not included. See next page
Model	REMOTE BOX 5.6-33W 700mA
Reference	U100003602

	LIGHT SOURCE
Type	LED
Gross luminous flux	630 Lm
Color temperature	3000 K
Chromatic stability	MacAdam Step 3
Color Rendering Index	CRI>90
Power	6.3 W
Current	700 mA
Efficacy	100 Lm/W
LED lifespan	L90B10>102.000h

	LIGHTING FIXTURE | PHOTOMETRIC DATA
Lighting efficiency	92%
Delivered luminous flux	580 Lm
Light beam angle	38

	LIGHTING FIXTURE | ELECTRICAL DATA
Power values of the system	8.8 W
Voltage	120-277 V
Frequency	50/60 Hz
Dimming	0-10V

	OTHER DATA
IC Rated	Yes
Environmental location	DAMP

Awards

reddot design award winner 2019

archiproducts DESIGN AWARDS WINNER 2019

PREMIO ADCV 2019 PLATA

FX DESIGN AWARDS INTERNATIONAL SHORTLIST 2019

Bronze Delta ADI Awards 2020

Art is a minimalist and rational suspended luminary that allows an ambitious range of composition possibilities. Individually, it transmits a sober look, but when combined – in an ordered or anarchic way – it is revealed as a sculptural piece of art. This luminary can offer ambient lighting in any kind of actual interior design project. Its versatility makes possible both, a discreet lighting over a table or an artistic composition to smoothly light up vertical opened spaces.

Calle N, s/n - Pol. Ind. El Oliveral
46394 Ribarroja del Turia - Valencia (Spain)
info@arkoslight.com - www.arkoslight.com

5 Year GUARANTEE*

Art

ARKOSLIGHT

DIMENSIONS

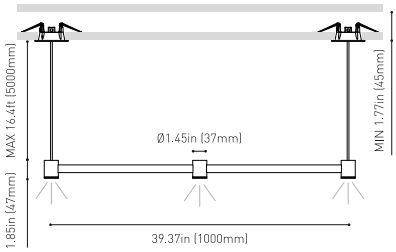

OTHER DATA

Recess measurements	2 x Ø1.97 in | 2 x Ø50 mm
Cord Length	MAX 16.4 ft | MAX 5 m
Fast adjustment tensioner	No
Weight	2.94 lb | 1334 gr
Packaged weight	4.14 lb | 1877 gr
Packaging dimensions	Ø6.10 x 42.52 in | Ø155 x 1080 mm
Materials	Brass - Acrylonitrile Butadiene Styrene + Polycarbonate

Intertek

Awards

reddot design award winner 2019

archiproducts DESIGN AWARDS WINNER 2019

PREMIO ADCV 2019 PLATA

FX DESIGN AWARDS INTERNATIONAL SHORTLIST 2019

Bronze Delta ADI Awards 2020

Art is a minimalist and rational suspended luminary that allows an ambitious range of composition possibilities. Individually, it transmits a sober look, but when combined – in an ordered or anarchic way – it is revealed as a sculptural piece of art. This luminary can offer ambient lighting in any kind of actual interior design project. Its versatility makes possible both, a discreet lighting over a table or an artistic composition to smoothly light up vertical opened spaces.

Calle N, s/n - Pol. Ind. El Oliveral
46394 Ribarroja del Turia - Valencia (Spain)
info@arkoslight.com - www.arkoslight.com

5 Year GUARANTEE*

Mounting Accessory / Driver

ARKOSLIGHT

Mandatory / Not Included

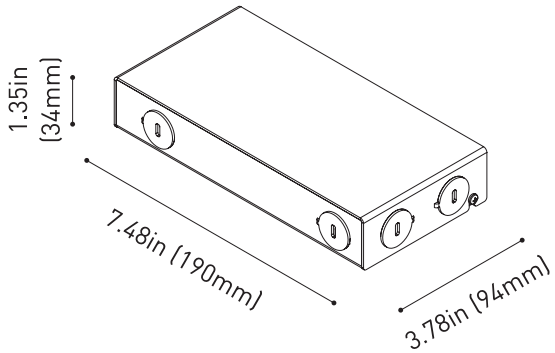

	PRODUCT
Model	REMOTE BOX 5.6-33W 700mA
Driver	Included
Reference	U100003602
IC Rated	Yes
Dimming	0-10V
Size	7.48 x 3.78 x 1.35 in | 190 x 94 x 34 mm
Weight	1.8 lb | 820 gr
Packaged weight	1.93 lb | 875 gr
Packaging dimensions	9.53 x 4.13 x 1.54 in | 242 x 105 x 39 mm
Nº Luminaires	1 to 2
LED - Driver Distance	Maximum suggested remote mounting distance is 16 feet

	INPUT CHARACTERISTICS
Input Voltage	120-277 V
Frequency	50/60 Hz

	OUTPUT CHARACTERISTICS
Output Voltage	8 - 47 V
Output Current	700 mA
Output Power	5.6 - 33 W

Intertek

Calle N, s/n - Pol. Ind. El Oliveral
46394 Ribarroja del Turia - Valencia (Spain)
info@arkoslight.com - www.arkoslight.com

5 Year GUARANTEE*

Lighting Technical Data

ARKOSLIGHT

POLAR DIAGRAM

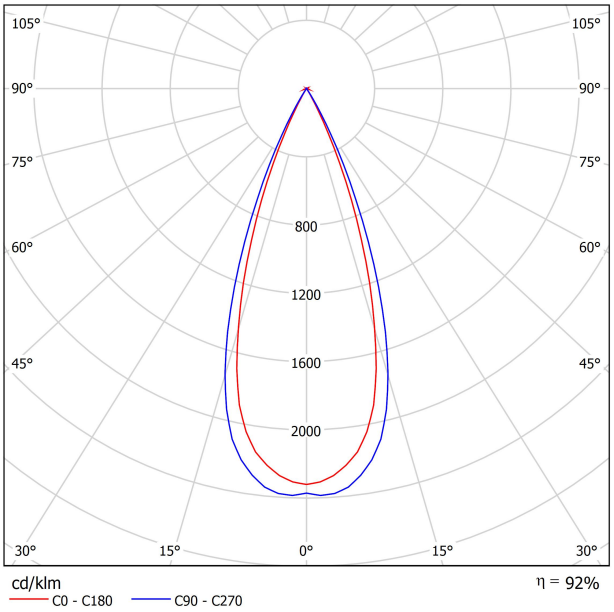
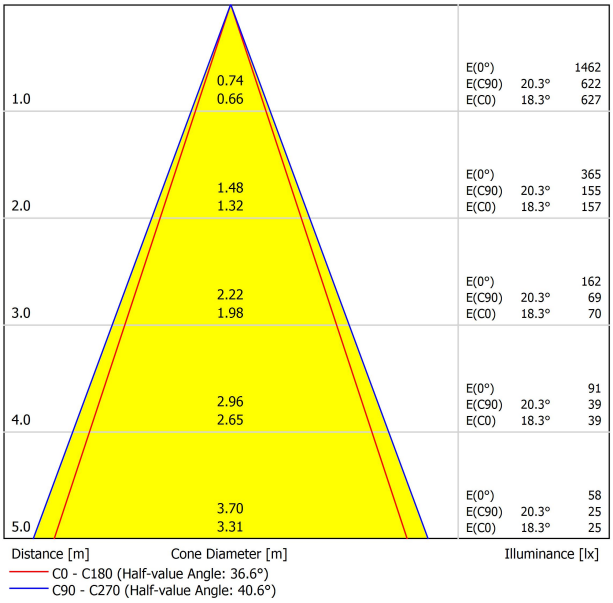
CONICAL DIAGRAM