Lens Light

ARKOSLIGHT

	PRODUCT
Name	LENS LIGHT UL 4000K N
Reference	U4690002N
Color	Black
RAL	Color in the mass looks alike RAL 9005
Category	CEILING RECESSED

	MOUNTING ACCESSORY / DRIVER
Mounting Accessory / Driver	Mandatory, not included. See next page
Model	REMOTE BOX 2-12.4W 250mA
Reference	U1000128

DIMENSIONS

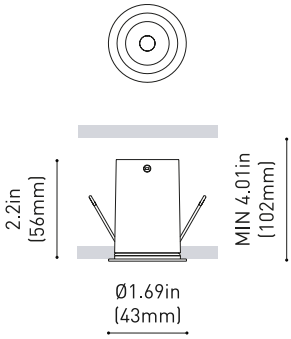

	LIGHT SOURCE
Type	LED
Gross luminous flux	330 Lm
Color temperature	4000 K
Chromatic stability	MacAdam Step 2
Color Rendering Index	CRI>90
Power	2.7 W
Current	250 mA
Efficacy	122 Lm/W
LED lifespan	L90B10>108.000h

	LIGHTING FIXTURE | PHOTOMETRIC DATA
Lighting efficiency	79%
Delivered luminous flux	261 Lm
Light beam angle	12°

	LIGHTING FIXTURE | ELECTRICAL DATA
Power values of the system	4.2 W
Voltage	120-277 V
Frequency	50/60 Hz
Dimming	0-10V

	OTHER DATA
IC Rated	Yes
Environmental location	DAMP

The compact Lens Light luminaire bathes the figure with scenic, powerful and concentrated light, perfect for accent lighting. Its design follows the discreet and seemingly simple line of the Shot Light. But it gains a more decorative presence as a point of light designed to explore the most dramatic aspect of interior lighting.

Calle N, s/n - Pol. Ind. El Oliveral
46394 Ribarroja del Turia - Valencia (Spain)
info@arkoslight.com - www.arkoslight.com

5 Year GUARANTEE*

Lens Light

ARKOSLIGHT

	OTHER DATA
Recess measurements	Ø1.50 in | Ø38 mm
Weight	0.176 lb | 80 gr
Packaged weight	0.245 lb | 111 gr
Packaging dimensions	3.15 x 2.68 x 3.54 in | 80 x 68 x 90 mm
Materials	Aluminium / Acrylonitrile Butadiene Styrene / Polycarbonate

DIMENSIONS

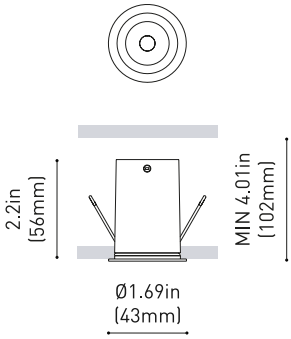

The compact Lens Light luminaire bathes the figure with scenic, powerful and concentrated light, perfect for accent lighting. Its design follows the discreet and seemingly simple line of the Shot Light. But it gains a more decorative presence as a point of light designed to explore the most dramatic aspect of interior lighting.

Calle N, s/n - Pol. Ind. El Oliveral
46394 Ribarroja del Turia - Valencia (Spain)
info@arkoslight.com - www.arkoslight.com

5 Year GUARANTEE*

Mounting Accessory / Driver

ARKOSLIGHT

Mandatory / Not Included

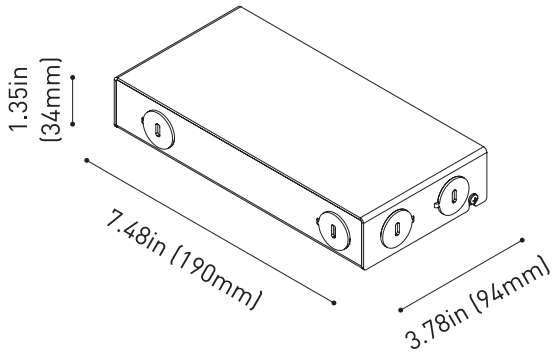

	PRODUCT
Model	REMOTE BOX 2-12.4W 250mA
Driver	Included
Reference	U1000128
IC Rated	Yes
Dimming	0-10V
Size	7.48 x 3.78 x 1.35 in | 190 x 94 x 34 mm
Weight	1.8 lb | 820 gr
Packaged weight	1.93 lb | 875 gr
Packaging dimensions	9.53 x 4.13 x 1.54 in | 242 x 105 x 39 mm
Nº Luminaires	1 to 4
LED - Driver Distance	Maximum suggested distance is 16 feet

	INPUT CHARACTERISTICS
Input Voltage	120-277 V
Frequency	50/60 Hz

	OUTPUT CHARACTERISTICS
Output Voltage	8 - 46 V
Output Current	250 mA
Output Power	2 - 12.4 W

Intertek

Calle N, s/n - Pol. Ind. El Oliveral
46394 Ribarroja del Turia - Valencia (Spain)
info@arkoslight.com - www.arkoslight.com

5 Year GUARANTEE*

Wiring Diagram

ARKOSLIGHT

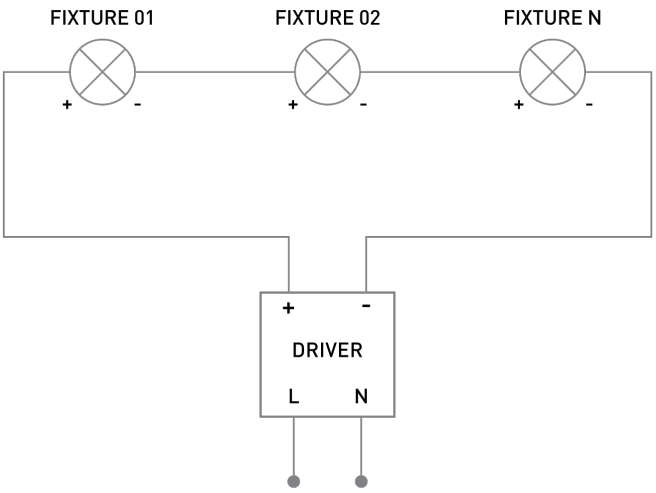

SERIAL CONNECTION FOR SEVERAL FIXTURES TO A SINGLE CONSTANT CURRENT DRIVER
RESPECT THE DISTANCE LED - DRIVER

Lighting Technical Data

ARKOSLIGHT

POLAR DIAGRAM

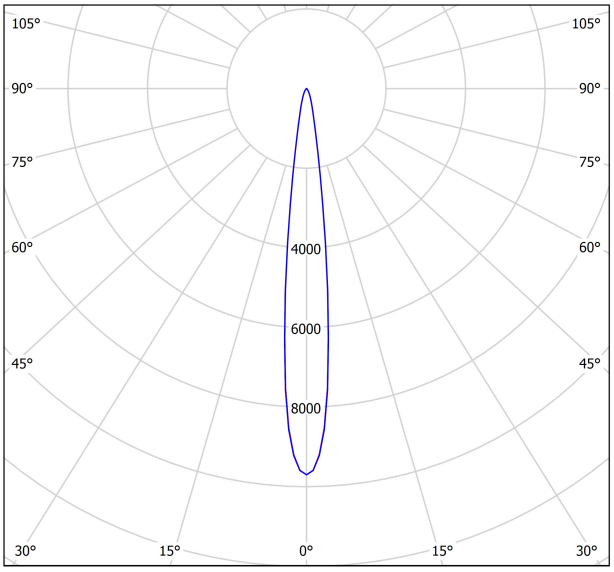

cd/klm

η = 79%

C0 - C180 C90 - C270

CONICAL DIAGRAM

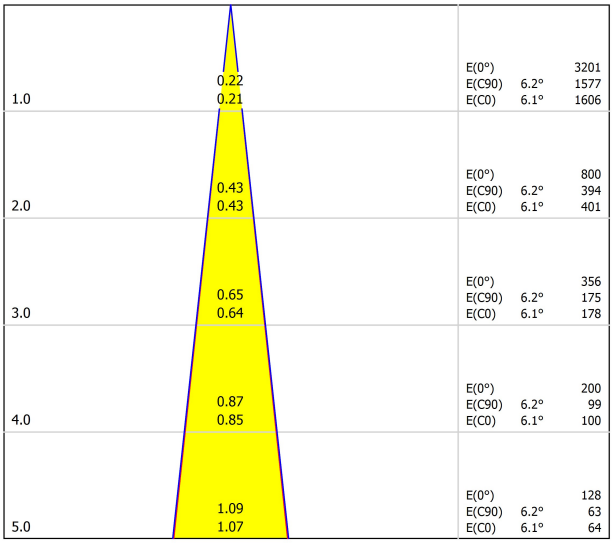

Distance [m] Cone Diameter [m] Illuminance [lx]

C0 - C180 (Half-value Angle: 12.2°)

C90 - C270 (Half-value Angle: 12.4°)

UGR

Glare Evaluation According to UGR

ρ Ceiling		70	70	50	50	30	70	70	50	50	30
ρ Walls		50	30	50	30	30	50	30	50	30	30
ρ Floor		20	20	20	20	20	20	20	20	20	20
Room Size X	Y	Viewing direction at right angles to lamp axis					Viewing direction parallel to lamp axis				
2H	2H	1.5	2.2	1.8	2.4	2.6	1.6	2.2	1.8	2.4	2.6
	3H	1.8	2.4	2.1	2.7	2.9	1.8	2.4	2.1	2.7	2.9
	4H	1.9	2.5	2.2	2.7	3.0	1.9	2.5	2.2	2.7	3.0
	6H	2.1	2.6	2.4	2.9	3.1	2.1	2.6	2.4	2.9	3.2
	8H	2.2	2.7	2.5	3.0	3.3	2.3	2.8	2.6	3.1	3.4
	12H	2.4	2.9	2.8	3.2	3.5	2.6	3.1	2.9	3.4	3.7
4H	2H	1.7	2.3	2.0	2.5	2.8	1.8	2.3	2.1	2.6	2.8
	3H	2.0	2.5	2.4	2.8	3.1	2.0	2.5	2.4	2.8	3.1
	4H	2.2	2.6	2.5	2.9	3.2	2.2	2.6	2.5	2.9	3.2
	6H	2.4	2.8	2.8	3.1	3.5	2.5	2.9	2.9	3.2	3.6
	8H	2.7	3.0	3.1	3.4	3.8	2.8	3.1	3.2	3.5	3.9
	12H	3.0	3.3	3.5	3.7	4.1	3.3	3.5	3.7	3.9	4.4
8H	4H	2.2	2.5	2.6	2.9	3.3	2.2	2.5	2.6	2.9	3.3
	6H	2.6	2.8	3.1	3.3	3.7	2.7	2.9	3.1	3.3	3.8
	8H	3.0	3.2	3.5	3.6	4.1	3.2	3.3	3.6	3.8	4.2
	12H	3.6	3.7	4.0	4.2	4.7	3.8	4.0	4.3	4.5	4.9
12H	4H	2.2	2.4	2.6	2.8	3.3	2.2	2.4	2.6	2.8	3.3
	6H	2.7	2.9	3.2	3.3	3.8	2.8	2.9	3.2	3.4	3.9
	8H	3.2	3.3	3.6	3.8	4.3	3.3	3.4	3.8	3.9	4.4
Variation of the observer position for the luminaire distances S											
S = 1.0H S = 1.5H S = 2.0H		+3.6 / -7.7 +6.2 / -8.9 +8.2 / -10.4					+3.5 / -7.5 +6.2 / -8.7 +8.2 / -10.1				
Standard table		BK00					BK00				
Correction Summand		-3.3					-3.3				
Corrected Glare Indices referring to 330lm Total Luminous Flux											