# Buddy

ARKOSLIGHT

## PRODUCT

| | |
|---|---|
| Name | BUDDY SUPER SPOT UL 2700K N |
| Reference | U5070000N |
| Color | Matt black |
| RAL | 9005 |
| Category | CEILING RECESSED |

## MOUNTING ACCESSORY / DRIVER

| | |
|---|---|
| Mounting Accessory / Driver | Mandatory, not included. See next page |
| Model | REMOTE BOX 3–10.8W 300mA |
| Reference | U1000136 |

## DIMENSIONS

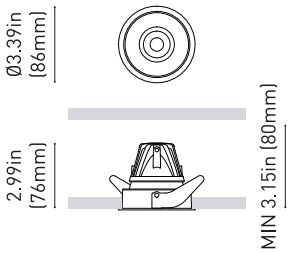


## LIGHT SOURCE

| | |
|---|---|
| Type | LED |
| Gross luminous flux | 470 Lm |
| Color temperature | 2700 K |
| Chromatic stability | MacAdam Step 2 |
| Color Rendering Index | CRI>90 |
| Power | 3.4 W |
| Current | 300 mA |
| LED lifespan | L80B10>55.000h |

## LIGHTING FIXTURE | PHOTOMETRIC DATA

| | |
|---|---|
| Lighting efficiency | 58% |
| Delivered luminous flux | 273 Lm |
| Light beam angle | 12° |

## LIGHTING FIXTURE | ELECTRICAL DATA

| | |
|---|---|
| Power values of the system | 5 W |
| Voltage | 120-277 V |
| Frequency | 50/60 Hz |
| Dimming | 0-10V |

## OTHER DATA

| | |
|---|---|
| IC Rated | Yes |
| Environmental location | DAMP |
| Recess measurements | Ø3.11 in \| Ø79 mm |
| Weight | 0.386 lb \| 175 gr |
| Packaged weight | 0.542 lb \| 246 gr |
| Packaging dimensions | 5.47 x 4.13 x 3.54 in \| 139 x 105 x 90 mm |
| Materials | Aluminium / Polycarbonate / Polymethyl Methacrylate |

Intertek

The sophistication of recessed lighting. Buddy is here to maximise the luminous performance of the classic recessed luminaire. It emerges with a solid and purposeful design, greater energy savings and excellent visual comfort. The product family comes in several versions with four opening angles -flood, medium, spot and super spot-. The dim to warm technology enables Buddy to facilitate comfort to the space by dimming the intensity and colour temperature. Furthermore, with the tunable White feature it can be controlled independently. Its four versions per position demonstrate its versatility: recessed, trimless, tilt and the tilt trimless version, which maintains its light output at all opening angles.

Calle N, s/n - Pol. Ind. El Oliveral
46394 Ribarroja del Turia - Valencia (Spain)
info@arkoslight.com - www.arkoslight.com



5 Year GUARANTEE*

# Mounting Accessory / Driver

ARKOSLIGHT

## Mandatory / Not Included

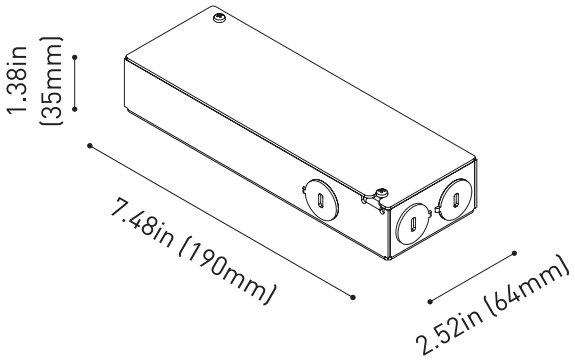


| | PRODUCT |
|---|---|
| **Model** | REMOTE BOX 3–10.8W 300mA |
| **Driver** | Included |
| **Reference** | U1000136 |
| **IC Rated** | Yes |
| **Dimming** | 0-10V |
| **Size** | 7.48 x 2.52 x 1.38 in \| 190 x 64 x 35 mm |
| **Weight** | 1.21 lb \| 550 gr |
| **Packaged weight** | 1.93 lb \| 875 gr |
| **Packaging dimensions** | 11.26 x 2.91 x 1.77 in \| 286 x 74 x 45 mm |
| **Nº Luminaires** | 1 to 4 |
| **LED - Driver Distance** | Maximum suggested distance is 24 feet |

| | INPUT CHARACTERISTICS |
|---|---|
| **Input Voltage** | 120-277 V |
| **Frequency** | 50/60 Hz |

| | OUTPUT CHARACTERISTICS |
|---|---|
| **Output Voltage** | 10 - 40 V |
| **Output Current** | 300 mA |
| **Output Power** | 3 - 10.8 W |

Intertek

Calle N, s/n - Pol. Ind. El Oliveral
46394 Ribarroja del Turia - Valencia (Spain)
info@arkoslight.com - www.arkoslight.com



5 Year GUARANTEE*

# Wiring Diagram

ARKOSLIGHT

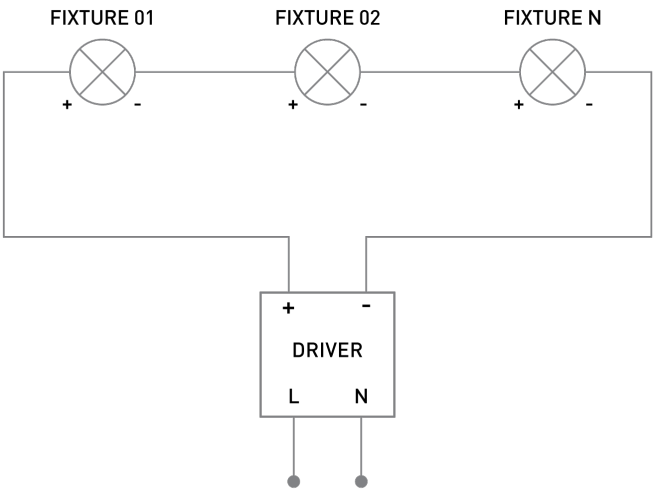


SERIAL CONNECTION FOR SEVERAL FIXTURES TO A SINGLE CONSTANT CURRENT DRIVER
RESPECT THE DISTANCE LED - DRIVER

Calle N, s/n - Pol. Ind. El Oliveral
46394 Ribarroja del Turia - Valencia (Spain)
info@arkoslight.com - www.arkoslight.com



5 Year GUARANTEE*

# Lighting Technical Data

ARKOSLIGHT

## POLAR DIAGRAM

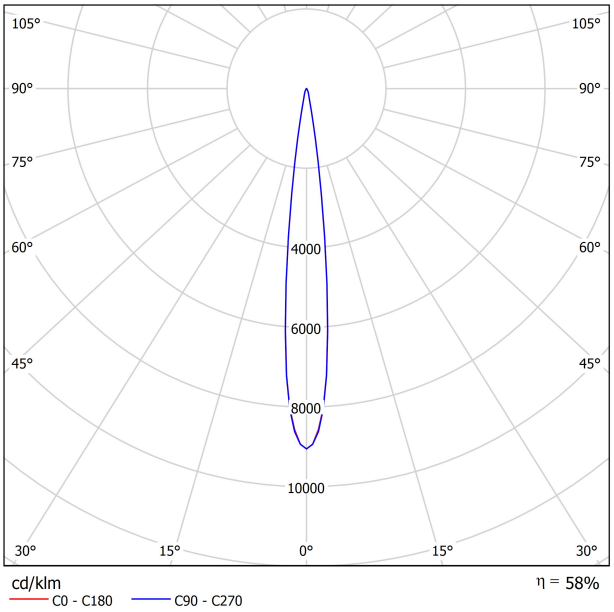


## CONICAL DIAGRAM

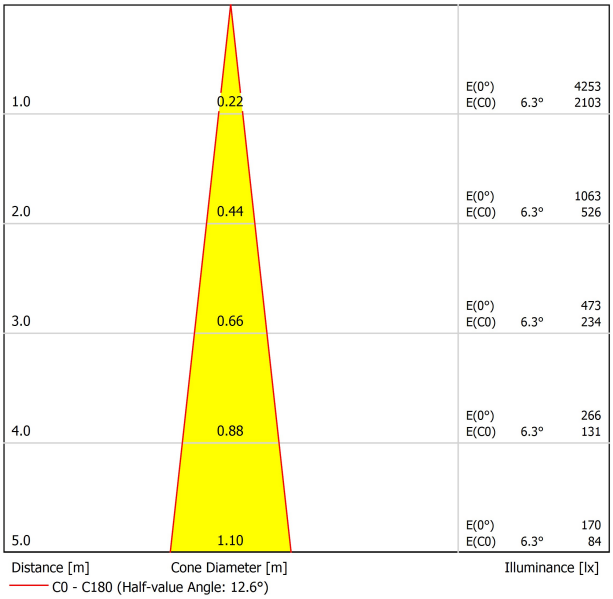


## UGR

**Glare Evaluation According to UGR**

| | | | | | | | | | | | |
|---|---|---|---|---|---|---|---|---|---|---|---|
| ρ Ceiling | | 70 | 70 | 50 | 50 | 30 | 70 | 70 | 50 | 50 | 30 |
| ρ Walls | | 50 | 30 | 50 | 30 | 30 | 50 | 30 | 50 | 30 | 30 |
| ρ Floor | | 20 | 20 | 20 | 20 | 20 | 20 | 20 | 20 | 20 | 20 |
| Room Size X | Y | Viewing direction at right angles to lamp axis | | | | | Viewing direction parallel to lamp axis | | | | |
| 2H | 2H | -31.3 | -30.6 | -31.0 | -30.4 | -30.2 | -33.2 | -32.6 | -33.0 | -32.4 | -32.2 |
| | 3H | -31.4 | -30.8 | -31.1 | -30.6 | -30.3 | -33.3 | -32.8 | -33.1 | -32.5 | -32.3 |
| | 4H | -31.5 | -30.9 | -31.2 | -30.7 | -30.4 | -33.4 | -32.9 | -33.1 | -32.6 | -32.4 |
| | 6H | -31.5 | -31.0 | -31.2 | -30.8 | -30.5 | -33.5 | -33.0 | -33.2 | -32.7 | -32.4 |
| | 8H | -31.6 | -31.1 | -31.2 | -30.8 | -30.5 | -33.5 | -33.0 | -33.2 | -32.8 | -32.5 |
| | 12H | -31.6 | -31.1 | -31.3 | -30.8 | -30.5 | -33.6 | -33.1 | -33.2 | -32.8 | -32.5 |
| 4H | 2H | -31.5 | -30.9 | -31.2 | -30.7 | -30.4 | -33.4 | -32.9 | -33.1 | -32.6 | -32.4 |
| | 3H | -31.6 | -31.1 | -31.3 | -30.8 | -30.5 | -33.6 | -33.1 | -33.2 | -32.8 | -32.5 |
| | 4H | -31.7 | -31.3 | -31.3 | -31.0 | -30.6 | -33.6 | -33.2 | -33.3 | -32.9 | -32.6 |
| | 6H | -31.8 | -31.4 | -31.4 | -31.1 | -30.7 | -33.7 | -33.4 | -33.3 | -33.0 | -32.7 |
| | 8H | -31.8 | -31.5 | -31.4 | -31.1 | -30.7 | -33.8 | -33.5 | -33.3 | -33.1 | -32.7 |
| | 12H | -31.8 | -31.6 | -31.4 | -31.2 | -30.8 | -33.8 | -33.6 | -33.4 | -33.2 | -32.7 |
| 8H | 4H | -31.8 | -31.5 | -31.4 | -31.1 | -30.7 | -33.8 | -33.5 | -33.3 | -33.1 | -32.7 |
| | 6H | -31.9 | -31.7 | -31.4 | -31.2 | -30.8 | -33.8 | -33.6 | -33.4 | -33.2 | -32.8 |
| | 8H | -31.9 | -31.8 | -31.5 | -31.3 | -30.8 | -33.9 | -33.7 | -33.4 | -33.3 | -32.8 |
| | 12H | -32.0 | -31.8 | -31.5 | -31.4 | -30.9 | -33.9 | -33.8 | -33.5 | -33.3 | -32.8 |
| 12H | 4H | -31.8 | -31.6 | -31.4 | -31.2 | -30.8 | -33.8 | -33.6 | -33.4 | -33.2 | -32.7 |
| | 6H | -31.9 | -31.8 | -31.5 | -31.3 | -30.8 | -33.9 | -33.7 | -33.4 | -33.3 | -32.8 |
| | 8H | -32.0 | -31.8 | -31.5 | -31.4 | -30.9 | -33.9 | -33.8 | -33.5 | -33.3 | -32.8 |
| Variation of the observer position for the luminaire distances S | | | | | | | | | | | |
| S = 1.0H | | +4.6 / -17.5 | | | | | +4.5 / -16.9 | | | | |
| S = 1.5H | | +7.3 / -86.2 | | | | | +7.3 / -86.1 | | | | |
| S = 2.0H | | +9.3 / -84.2 | | | | | +9.3 / -84.1 | | | | |
| Standard table | | BK00 | | | | | BK00 | | | | |
| Correction Summand | | -15.0 | | | | | -15.1 | | | | |
| Corrected Glare Indices referring to 470lm Total Luminous Flux | | | | | | | | | | | |