Buddy

ARKOSLIGHT

PRODUCT

Name	BUDDY TW UL 2700K-5000K MEDIUM NG
Reference	U5070128NG
Color	Black-Gold
RAL	9005 & 1036
Category	CEILING RECESSED

MOUNTING ACCESSORY / DRIVER

Mounting Accessory / Driver	Mandatory, not included. See next page
Model	REMOTE BOX 2–12.1W 250mA
Reference	U1000127

DIMENSIONS

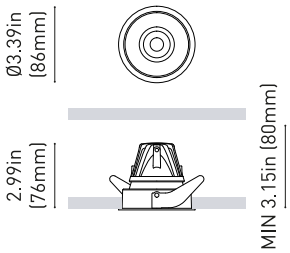

LIGHT SOURCE

Type	LED
Gross luminous flux	485 Lm
Color temperature	2700 - 5000 K
Chromatic stability	MacAdam Step 3
Color Rendering Index	CRI>90
Power	4 W
Current	250 mA
Efficacy	121 Lm/W
LED lifespan	L80B10>55.000h

LIGHTING FIXTURE | PHOTOMETRIC DATA

Lighting efficiency	81%
Delivered luminous flux	393 Lm
Light beam angle	43°

LIGHTING FIXTURE | ELECTRICAL DATA

Power values of the system	6.1 W
Voltage	120-277 V
Frequency	50/60 Hz
Dimming	0-10V

OTHER DATA

IC Rated	Yes
Environmental location	DAMP

The sophistication of recessed lighting. Buddy is here to maximise the luminous performance of the classic recessed luminaire. It emerges with a solid and purposeful design, greater energy savings and excellent visual comfort. The product family comes in several versions with four opening angles -flood, medium, spot and super spot-. The dim to warm technology enables Buddy to facilitate comfort to the space by dimming the intensity and colour temperature. Furthermore, with the tunable White feature it can be controlled independently. Its four versions per position demonstrate its versatility: recessed, trimless, tilt and the tilt trimless version, which maintains its light output at all opening angles.

Calle N, s/n - Pol. Ind. El Oliveral
46394 Ribarroja del Turia - Valencia (Spain)
info@arkoslight.com - www.arkoslight.com

5 Year GUARANTEE*

Buddy

ARKOSLIGHT

	OTHER DATA
Recess measurements	Ø3.11 in | Ø79 mm
Weight	0.386 lb | 175 gr
Packaged weight	0.542 lb | 246 gr
Packaging dimensions	5.47 x 4.13 x 3.54 in | 139 x 105 x 90 mm
Materials	Aluminium / Polycarbonate / Polymethyl Methacrylate

Intertek

DIMENSIONS

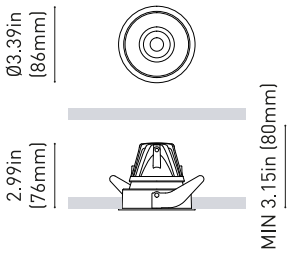

The sophistication of recessed lighting. Buddy is here to maximise the luminous performance of the classic recessed luminaire. It emerges with a solid and purposeful design, greater energy savings and excellent visual comfort. The product family comes in several versions with four opening angles -flood, medium, spot and super spot-. The dim to warm technology enables Buddy to facilitate comfort to the space by dimming the intensity and colour temperature. Furthermore, with the tunable White feature it can be controlled independently. Its four versions per position demonstrate its versatility: recessed, trimless, tilt and the tilt trimless version, which maintains its light output at all opening angles.

Calle N, s/n - Pol. Ind. El Oliveral
46394 Ribarroja del Turia - Valencia (Spain)
info@arkoslight.com - www.arkoslight.com

5 Year GUARANTEE*

Mounting Accessory / Driver

ARKOSLIGHT

Mandatory / Not Included

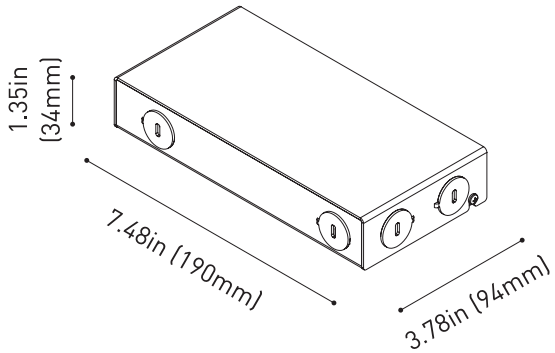

	PRODUCT
Model	REMOTE BOX 2–12.1W 250mA
Driver	Included
Reference	U1000127
IC Rated	Yes
Dimming	0-10V
Size	7.48 x 3.78 x 1.35 in | 190 x 94 x 34 mm
Weight	1.73 lb | 785 gr
Packaged weight	1.93 lb | 875 gr
Packaging dimensions	9.53 x 4.13 x 1.54 in | 242 x 105 x 39 mm
Nº Luminaires	1
LED - Driver Distance	Maximum suggested distance is 16 feet

	INPUT CHARACTERISTICS
Input Voltage	120-277 V
Frequency	50/60 Hz

	OUTPUT CHARACTERISTICS
Output Voltage	8 - 54 V
Output Current	250 mA
Output Power	2 - 12.1 W

Calle N, s/n - Pol. Ind. El Oliveral
46394 Ribarroja del Turia - Valencia (Spain)
info@arkoslight.com - www.arkoslight.com

5 Year GUARANTEE*

Wiring Diagram

ARKOSLIGHT

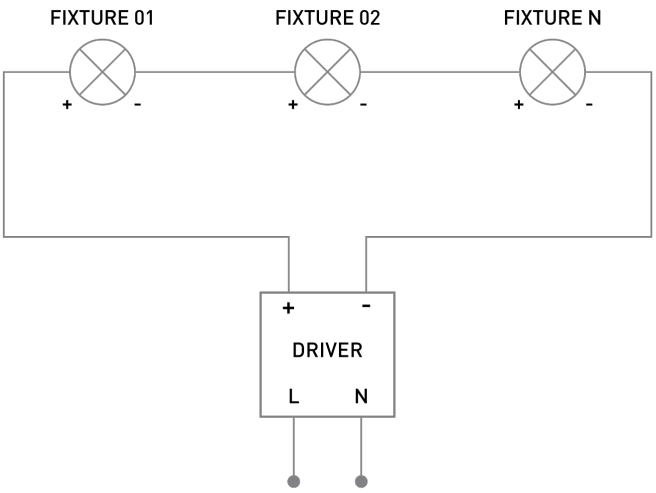

SERIAL CONNECTION FOR SEVERAL FIXTURES TO A SINGLE CONSTANT CURRENT DRIVER
RESPECT THE DISTANCE LED - DRIVER

Lighting Technical Data

ARKOSLIGHT

POLAR DIAGRAM

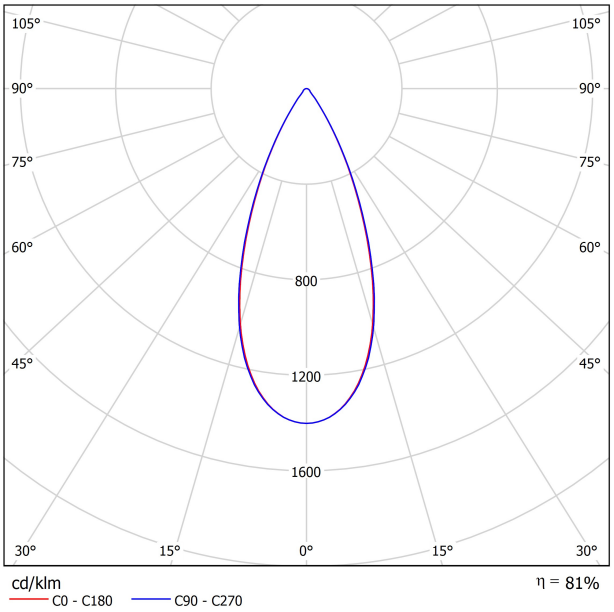

CONICAL DIAGRAM

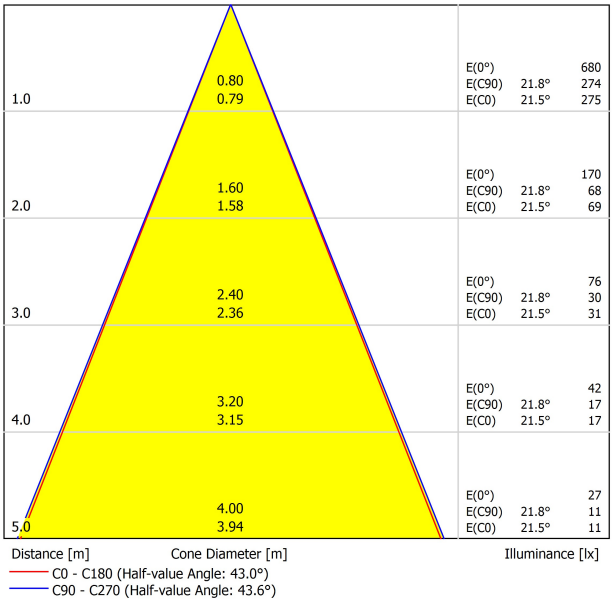

UGR

Glare Evaluation According to UGR

ρ Ceiling		70	70	50	50	30	70	70	50	50	30
ρ Walls		50	30	50	30	30	50	30	50	30	30
ρ Floor		20	20	20	20	20	20	20	20	20	20
Room Size X	Y	Viewing direction at right angles to lamp axis					Viewing direction parallel to lamp axis				
2H	2H	9.9	10.6	10.2	10.8	11.0	9.9	10.6	10.2	10.8	11.0
	3H	11.6	12.3	11.9	12.5	12.8	11.6	12.3	11.9	12.5	12.8
	4H	12.3	12.9	12.6	13.1	13.4	12.3	12.9	12.6	13.2	13.4
	6H	12.8	13.3	13.1	13.6	13.9	12.8	13.4	13.1	13.6	13.9
	8H	13.0	13.5	13.3	13.8	14.1	13.0	13.5	13.3	13.8	14.1
	12H	13.1	13.6	13.4	13.9	14.2	13.1	13.6	13.5	13.9	14.2
4H	2H	10.5	11.1	10.8	11.4	11.6	10.5	11.1	10.8	11.4	11.6
	3H	12.4	12.9	12.8	13.2	13.6	12.4	13.0	12.8	13.3	13.6
	4H	13.2	13.7	13.6	14.0	14.3	13.2	13.7	13.6	14.0	14.4
	6H	13.8	14.2	14.2	14.6	14.9	13.9	14.2	14.3	14.6	15.0
	8H	14.1	14.4	14.5	14.8	15.2	14.1	14.4	14.5	14.8	15.2
	12H	14.2	14.5	14.7	14.9	15.4	14.3	14.6	14.7	15.0	15.4
8H	4H	13.5	13.8	13.9	14.2	14.6	13.5	13.8	13.9	14.2	14.6
	6H	14.3	14.5	14.7	14.9	15.4	14.3	14.5	14.7	15.0	15.4
	8H	14.6	14.8	15.0	15.2	15.7	14.6	14.8	15.1	15.3	15.7
	12H	14.8	15.0	15.3	15.5	16.0	14.9	15.0	15.3	15.5	16.0
12H	4H	13.5	13.8	14.0	14.2	14.6	13.5	13.8	14.0	14.2	14.6
	6H	14.3	14.5	14.8	15.0	15.4	14.3	14.6	14.8	15.0	15.5
	8H	14.7	14.8	15.2	15.3	15.8	14.7	14.9	15.2	15.3	15.8
Variation of the observer position for the luminaire distances S											
S = 1.0H		+2.3 / -1.0					+2.3 / -1.0				
S = 1.5H		+4.2 / -1.2					+4.3 / -1.3				
S = 2.0H		+5.9 / -1.6					+6.0 / -1.6				
Standard table		BK03					BK03				
Correction Summand		-0.7					-0.7				
Corrected Glare Indices referring to 485lm Total Luminous Flux											