Coco Recessed

ARKOSLIGHT

	PRODUCT
Name	COCO RECESSED SUPER SPOT UL 4000K NT
Reference	U5300202NT
Color	Textured black
RAL	9005
Category	CEILING RECESSED

	MOUNTING ACCESSORY / DRIVER
Mounting Accessory / Driver	Mandatory, not included. See next page
Model	REMOTE BOX 4-23W 500mA
Reference	U1000035

DIMENSIONS

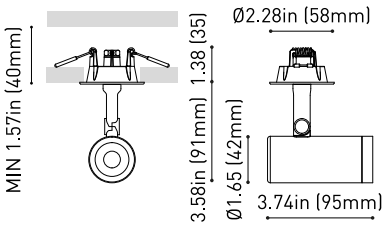

	LIGHT SOURCE
Type	LED
Gross luminous flux	850 Lm
Color temperature	4000 K
Chromatic stability	MacAdam Step 2
Color Rendering Index	CRI>90
Power	6 W
Current	500 mA
Efficacy	142 Lm/W
LED lifespan	L80B10>55.000h

	LIGHTING FIXTURE | PHOTOMETRIC DATA
Lighting efficiency	66%
Delivered luminous flux	561 Lm
Light beam angle	12°

Accessories

HONEYCOMB LOUVER

ANTI-GLARE SCREEN

LINEAR FILTER

	LIGHTING FIXTURE | ELECTRICAL DATA
Power values of the system	8.1 W
Voltage	120-277 V
Frequency	50/60 Hz
Dimming	0-10V

	OTHER DATA
IC Rated	Yes
Environmental location	DAMP

Awards

reddot winner 2024 lighting design

archiproducts AWARDS WINNER

iF DESIGN AWARD 2025

A lightweight and powerful solution. Coco is a spotlight with a qualitative and uniform light distribution and provides great freedom of light emissions with four opening angles -flood, medium, spot and superspot - a 360° rotation and a 90° tilt. With an exceptional lm/W ratio, it can be fitted with various accessories: anti-glare honeycomb and anti-glare screen, which reduce glare to facilitate visual comfort, and the linear filter, which sets a linear light distribution. Coco invites one to interact with the light through a version with integrated dimmer, enabling one to adjust the desired intensity in each luminaire. Its tunable white version replicates the effects of natural light by regulating the intensity and colour temperature.

Calle N, s/n - Pol. Ind. El Oliveral
46394 Ribarroja del Turia - Valencia (Spain)
info@arkoslight.com - www.arkoslight.com

5 Year GUARANTEE*

Coco Recessed

ARKOSLIGHT

	OTHER DATA
Recess measurements	Ø1.97 in | Ø50 mm
Swivel angle	90°
Rotation angle	350°
Weight	0.392 lb | 178 gr
Packaged weight	0.595 lb | 270 gr
Packaging dimensions	7.64 x 7.17 x 2.76 in | 194 x 182 x 70 mm
Materials	Aluminium / Acrylonitrile Butadiene Styrene / Polycarbonate

Intertek

DIMENSIONS

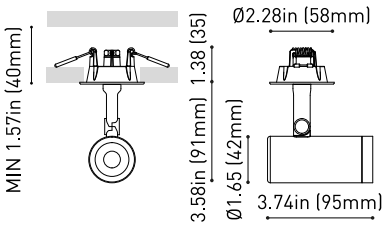

Accessories

HONEYCOMB LOUVER

ANTI-GLARE SCREEN

LINEAR FILTER

Awards

reddot winner 2024 lighting design

archiproducts AWARDS WINNER

DESIGN AWARD 2025

A lightweight and powerful solution. Coco is a spotlight with a qualitative and uniform light distribution and provides great freedom of light emissions with four opening angles -flood, medium, spot and superspot - a 360° rotation and a 90° tilt. With an exceptional lm/W ratio, it can be fitted with various accessories: anti-glare honeycomb and anti-glare screen, which reduce glare to facilitate visual comfort, and the linear filter, which sets a linear light distribution. Coco invites one to interact with the light through a version with integrated dimmer, enabling one to adjust the desired intensity in each luminaire. Its tunable white version replicates the effects of natural light by regulating the intensity and colour temperature.

Calle N, s/n - Pol. Ind. El Oliveral
46394 Ribarroja del Turia - Valencia (Spain)
info@arkoslight.com - www.arkoslight.com

5 Year GUARANTEE*

Mounting Accessory / Driver

ARKOSLIGHT

Mandatory / Not Included

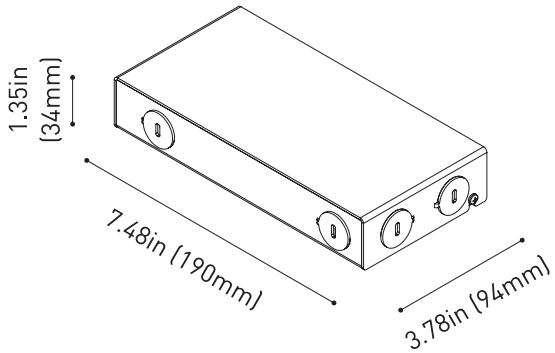

	PRODUCT
Model	REMOTE BOX 4-23W 500mA
Driver	Included
Reference	U1000035
IC Rated	Yes
Dimming	0-10V
Size	7.48 x 3.78 x 1.35 in | 190 x 94 x 34 mm
Weight	1.8 lb | 820 gr
Packaged weight	1.93 lb | 875 gr
Packaging dimensions	9.53 x 4.13 x 1.54 in | 242 x 105 x 39 mm
Nº Luminaires	1 to 4
LED - Driver Distance	Maximum suggested distance is 16 feet

	INPUT CHARACTERISTICS
Input Voltage	120-277 V
Frequency	50/60 Hz

	OUTPUT CHARACTERISTICS
Output Voltage	8 - 46 V
Output Current	500 mA
Output Power	4 - 23 W

Intertek

Calle N, s/n - Pol. Ind. El Oliveral
46394 Ribarroja del Turia - Valencia (Spain)
info@arkoslight.com - www.arkoslight.com

5 Year GUARANTEE*

Wiring Diagram

ARKOSLIGHT

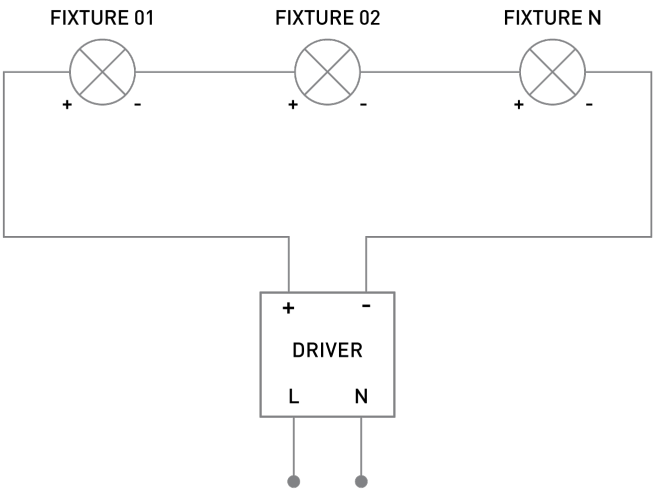

SERIAL CONNECTION FOR SEVERAL FIXTURES TO A SINGLE CONSTANT CURRENT DRIVER
RESPECT THE DISTANCE LED - DRIVER

Lighting Technical Data

ARKOSLIGHT

POLAR DIAGRAM

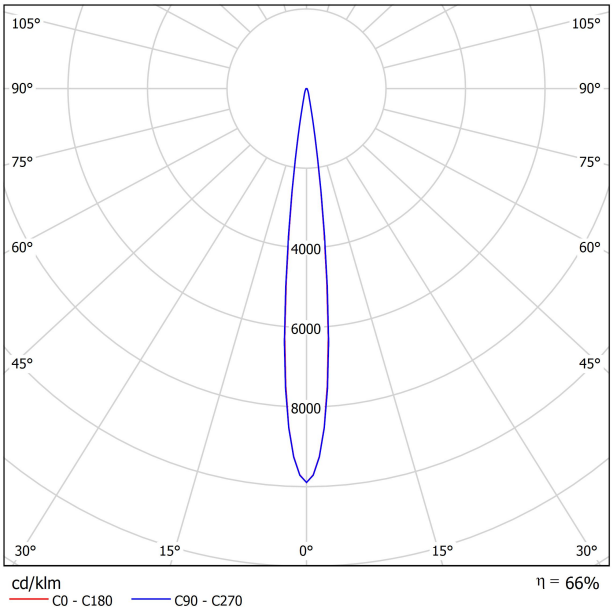

CONICAL DIAGRAM

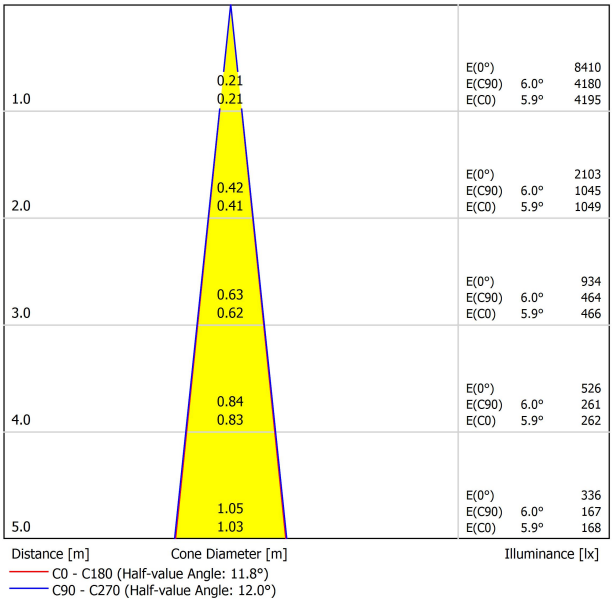

Anti-glare Honeycomb Louver

ARKOSLIGHT

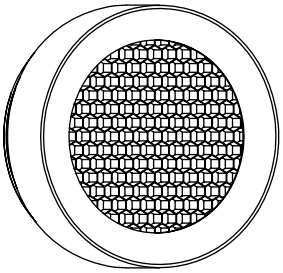

	PRODUCT
Model	Anti-glare Honeycomb Louver
Reference	**U498-90-00** | **WT** | **NT** |
Category	Accessories

NOT SOLD SEPARATELY.

Anti-glare Honeycomb Louver

Accessory featuring a honeycomb structure designed to control the light beam, reduce glare, and prevent direct exposure to the light source.

Calle N, s/n - Pol. Ind. El Oliveral
46394 Ribarroja del Turia-Valencia (Spain)
info@arkoslight.com - www.arkoslight.com

5Year GUARANTEE

Anti-glare Screen

ARKOSLIGHT

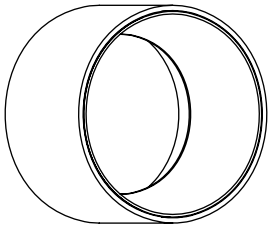

	PRODUCT
Model	Anti-glare Screen
Reference	**U498-90-01** | **WT** | **NT** |
Category	Accessories

NOT SOLD SEPARATELY.

Anti-glare Screen

Accessory designed to reduce direct glare, especially in luminaires with visible optics, and improve visual comfort by blocking uncomfortable emission angles.

Calle N, s/n - Pol. Ind. El Oliveral
46394 Ribarroja del Turia-Valencia (Spain)
info@arkoslight.com - www.arkoslight.com

5Year GUARANTEE

Linear Filter

ARKOSLIGHT

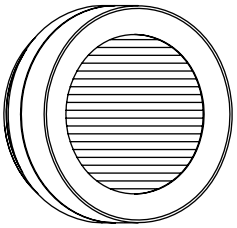

	PRODUCT
Model	Linear Filter
Reference	**U498-90-02** | **WT** | **NT** |
Category	Accessories

NOT SOLD SEPARATELY | SUITABLE FOR BEAM ≤ 34º

Linear Filter

Transforms the circular light beam into a linear shape. Ideal for applications requiring precise, linear light distribution, allowing you to focus on specific surfaces or avoid the effect of “light pooling” in wide areas.

Calle N, s/n - Pol. Ind. El Oliveral
46394 Ribarroja del Turia-Valencia (Spain)
info@arkoslight.com - www.arkoslight.com

5Year GUARANTEE