Hey Joe

ARKOSLIGHT

	PRODUCT
Name	HEY JOE 2700K WB UL
Reference	U5351050WB
Color	Bright Pebble Grey
RAL	9016
Category	SUSPENSION

	MOUNTING ACCESSORY / DRIVER
Mounting Accessory / Driver	Mandatory, not included. See next page
Model	REMOTE BOX 8.4-14.7W 350mA
Reference	U1000117

DIMENSIONS

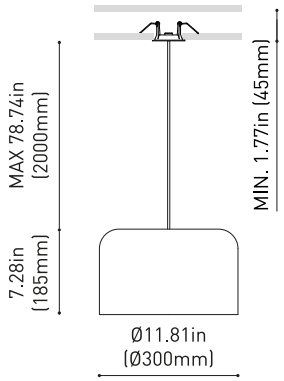

	LIGHT SOURCE
Type	LED
Gross luminous flux	1550 Lm
Color temperature	2700 K
Chromatic stability	MacAdam Step 2
Color Rendering Index	CRI>90
Power	11.5 W
Current	350 mA
Efficacy	135 Lm/W
LED lifespan	L80B10>60.000h

	LIGHTING FIXTURE | PHOTOMETRIC DATA
Lighting efficiency	44%
Delivered luminous flux	682 Lm
Light beam angle	86

	LIGHTING FIXTURE | ELECTRICAL DATA
Power values of the system	13.3 W
Voltage	120-277 V
Frequency	50/60 Hz
Dimming	0-10V

	OTHER DATA
IC Rated	Yes
Environmental location	DAMP

With a style that is as understated as it is iconic, this pendant luminaire joins the Arkoslight collection as a tribute to the contemporary classics of the 1960s. Hey Joe features a simple, clean design that brings quality to ambient lighting.

Calle N, s/n - Pol. Ind. El Oliveral
46394 Ribarroja del Turia - Valencia (Spain)
info@arkoslight.com - www.arkoslight.com

5 Year GUARANTEE*

Hey Joe

ARKOSLIGHT

	OTHER DATA
Recess measurements	Ø2.44 in | Ø62 mm
Cord Length	MAX. 6.55 ft | MAX. 2 m
Fast adjustment tensioner	No
Weight	1305 lb | 592 gr
Packaged weight	2660 lb | 1207 gr
Packaging dimensions	13.38 x 12.87 x 8.77 in | 340 x 327 x 223 mm
Materials	Aluminium

Intertek

DIMENSIONS

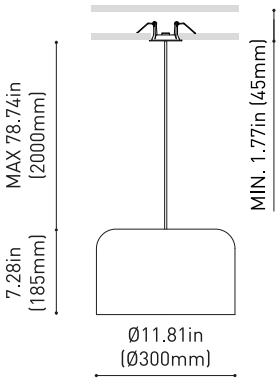

With a style that is as understated as it is iconic, this pendant luminaire joins the Arkoslight collection as a tribute to the contemporary classics of the 1960s. Hey Joe features a simple, clean design that brings quality to ambient lighting.

Calle N, s/n - Pol. Ind. El Oliveral
46394 Ribarroja del Turia - Valencia (Spain)
info@arkoslight.com - www.arkoslight.com

5 Year GUARANTEE*

Mounting Accessory / Driver

ARKOSLIGHT

Mandatory / Not Included

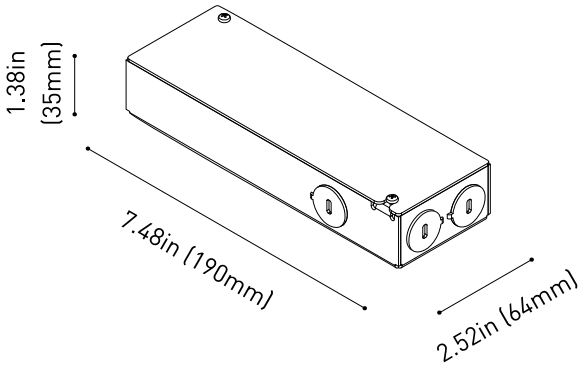

	PRODUCT
Model	REMOTE BOX 8.4-14.7W 350mA
Driver	Included
Reference	U1000117
IC Rated	Yes
Dimming	0-10V
Size	7.48 x 2.52 x 1.38 in | 190 x 64 x 35 mm
Weight	1.34 lb | 610 gr
Packaged weight	1.46 lb | 665 gr
Packaging dimensions	11.26 x 2.91 x 1.77 in | 286 x 74 x 45 mm
Nº Luminaires	1
LED - Driver Distance	Maximum suggested remote mounting distance is 24 feet

	INPUT CHARACTERISTICS
Input Voltage	120-277 V
Frequency	50/60 Hz

	OUTPUT CHARACTERISTICS
Output Voltage	24 - 42 V
Output Current	350 mA
Output Power	8.4 - 14.7 W

Intertek

Calle N, s/n - Pol. Ind. El Oliveral
46394 Ribarroja del Turia - Valencia (Spain)
info@arkoslight.com - www.arkoslight.com

5 Year GUARANTEE*

Wiring Diagram

ARKOSLIGHT

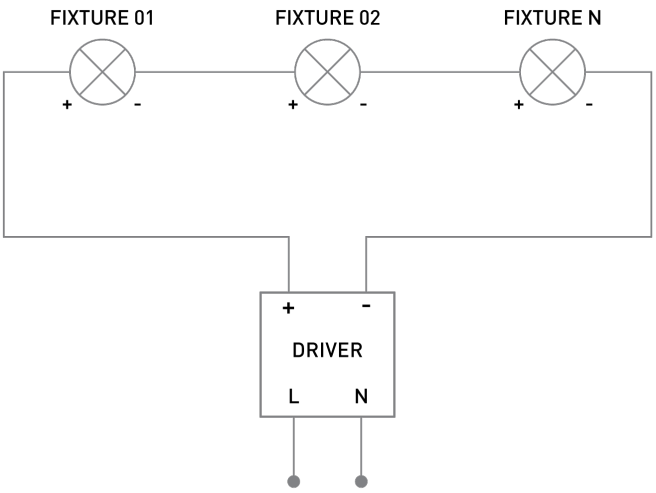

SERIAL CONNECTION FOR SEVERAL FIXTURES TO A SINGLE CONSTANT CURRENT DRIVER
RESPECT THE DISTANCE LED - DRIVER

POLAR DIAGRAM

CONICAL DIAGRAM

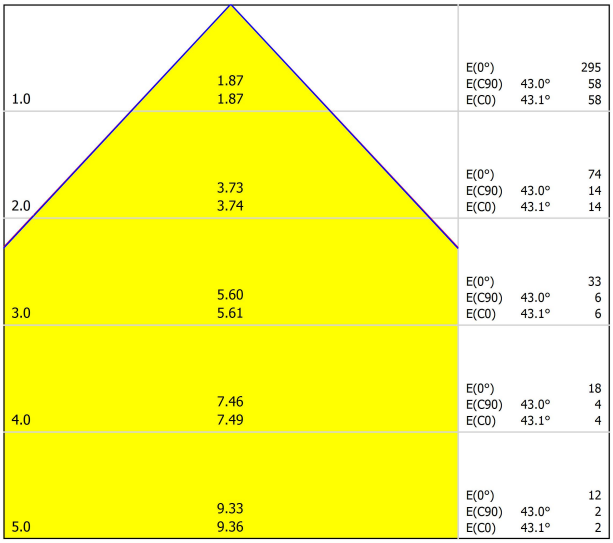

C0 - C180 (Half-value Angle: 86.2°)
C90 - C270 (Half-value Angle: 86.0°)