# Coco Surface

ARKOSLIGHT

| | PRODUCT |
|---|---|
| Name | COCO SURFACE UL MEDIUM 2700K NT |
| Reference | U5360220NT |
| Color | Textured black |
| RAL | 9005 |
| Category | SURFACE |

| | MOUNTING ACCESSORY / DRIVER |
|---|---|
| Mounting Accessory / Driver | Mandatory, not included. See next page |
| Model | REMOTE BOX 4-23W 500mA |
| Reference | U1000035 |

## DIMENSIONS

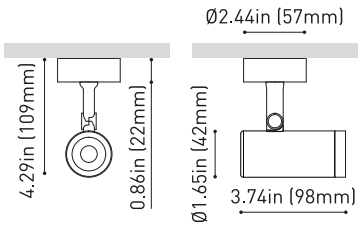


| | LIGHT SOURCE |
|---|---|
| Type | LED |
| Gross luminous flux | 1200 Lm |
| Color temperature | 2700 K |
| Chromatic stability | MacAdam Step 2 |
| Color Rendering Index | CRI>90 |
| Power | 8.7 W |
| Current | 500 mA |
| Efficacy | 138 Lm/W |
| LED lifespan | L80B10>66.000h |

| | LIGHTING FIXTURE \| PHOTOMETRIC DATA |
|---|---|
| Lighting efficiency | 89% |
| Delivered luminous flux | 1068 Lm |
| Light beam angle | 34° |

## Accessories

HONEYCOMB LOUVER

ANTI-GLARE SCREEN

LINEAR FILTER

| | LIGHTING FIXTURE \| ELECTRICAL DATA |
|---|---|
| Power values of the system | 11.3 W |
| Voltage | 120-277 V |
| Frequency | 50/60 Hz |
| Dimming | 0-10V |

| | OTHER DATA |
|---|---|
| IC Rated | Yes |
| Environmental location | DAMP |

## Awards

reddot winner 2024 lighting design

archiproducts AWARDS WINNER

iF DESIGN AWARD 2025

A lightweight and powerful solution. Coco is a spotlight with a qualitative and uniform light distribution and provides great freedom of light emissions with four opening angles -flood, medium, spot and superspot - a 360° rotation and a 90° tilt. With an exceptional lm/W ratio, it can be fitted with various accessories: anti-glare honeycomb and anti-glare screen, which reduce glare to facilitate visual comfort, and the linear filter, which sets a linear light distribution. Coco invites one to interact with the light through a version with integrated dimmer, enabling one to adjust the desired intensity in each luminaire. Its tunable white version replicates the effects of natural light by regulating the intensity and colour temperature.

Calle N, s/n - Pol. Ind. El Oliveral
46394 Ribarroja del Turia - Valencia (Spain)
info@arkoslight.com - www.arkoslight.com



5 Year GUARANTEE*

# Coco Surface

ARKOSLIGHT

| | OTHER DATA |
|---|---|
| Swivel angle | 90° |
| Rotation angle | 350° |
| Weight | 0.392 lb \| 178 gr |
| Packaged weight | 0.595 lb \| 270 gr |
| Packaging dimensions | 7.64 x 7.17 x 2.76 in \| 194 x 182 x 70 mm |
| Materials | Aluminium / Acrylonitrile Butadiene Styrene / Polycarbonate |

Intertek

## DIMENSIONS

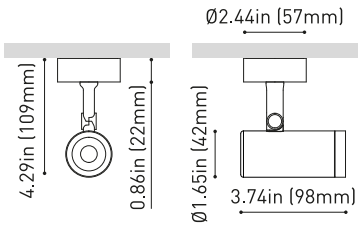


## Accessories

HONEYCOMB LOUVER

ANTI-GLARE SCREEN

LINEAR FILTER

## Awards

reddot winner 2024 lighting design

archiproducts AWARDS WINNER

DESIGN AWARD 2025

A lightweight and powerful solution. Coco is a spotlight with a qualitative and uniform light distribution and provides great freedom of light emissions with four opening angles -flood, medium, spot and superspot - a 360° rotation and a 90° tilt. With an exceptional lm/W ratio, it can be fitted with various accessories: anti-glare honeycomb and anti-glare screen, which reduce glare to facilitate visual comfort, and the linear filter, which sets a linear light distribution. Coco invites one to interact with the light through a version with integrated dimmer, enabling one to adjust the desired intensity in each luminaire. Its tunable white version replicates the effects of natural light by regulating the intensity and colour temperature.

Calle N, s/n - Pol. Ind. El Oliveral
46394 Ribarroja del Turia - Valencia (Spain)
info@arkoslight.com - www.arkoslight.com



5 Year GUARANTEE*

# Mounting Accessory / Driver

ARKOSLIGHT

## Mandatory / Not Included

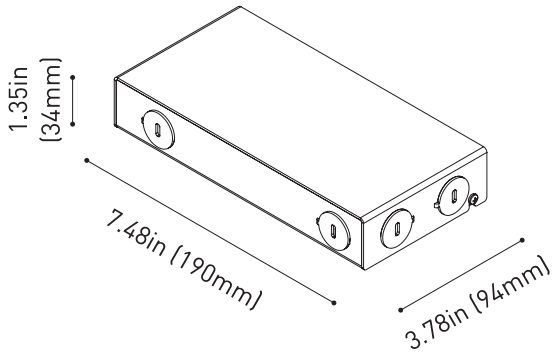


| | PRODUCT |
|---|---|
| **Model** | REMOTE BOX 4-23W 500mA |
| **Driver** | Included |
| **Reference** | U1000035 |
| **IC Rated** | Yes |
| **Dimming** | 0-10V |
| **Size** | 7.48 x 3.78 x 1.35 in \| 190 x 94 x 34 mm |
| **Weight** | 1.8 lb \| 820 gr |
| **Packaged weight** | 1.93 lb \| 875 gr |
| **Packaging dimensions** | 9.53 x 4.13 x 1.54 in \| 242 x 105 x 39 mm |
| **Nº Luminaires** | 1 to 2 |
| **LED - Driver Distance** | Maximum suggested distance is 16 feet |

| | INPUT CHARACTERISTICS |
|---|---|
| **Input Voltage** | 120-277 V |
| **Frequency** | 50/60 Hz |

| | OUTPUT CHARACTERISTICS |
|---|---|
| **Output Voltage** | 8 - 46 V |
| **Output Current** | 500 mA |
| **Output Power** | 4 - 23 W |

Intertek

Calle N, s/n - Pol. Ind. El Oliveral
46394 Ribarroja del Turia - Valencia (Spain)
info@arkoslight.com - www.arkoslight.com



5 Year GUARANTEE*

# Wiring Diagram

ARKOSLIGHT

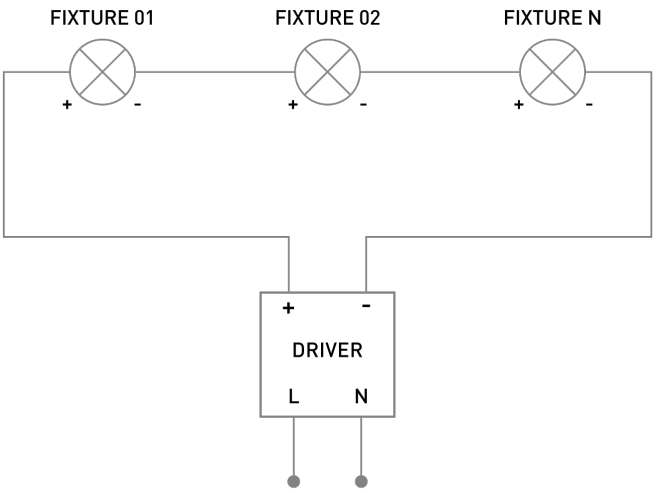


SERIAL CONNECTION FOR SEVERAL FIXTURES TO A SINGLE CONSTANT CURRENT DRIVER
RESPECT THE DISTANCE LED - DRIVER

Calle N, s/n - Pol. Ind. El Oliveral
46394 Ribarroja del Turia - Valencia (Spain)
info@arkoslight.com - www.arkoslight.com



5 Year GUARANTEE*

# Lighting Technical Data

ARKOSLIGHT

POLAR DIAGRAM

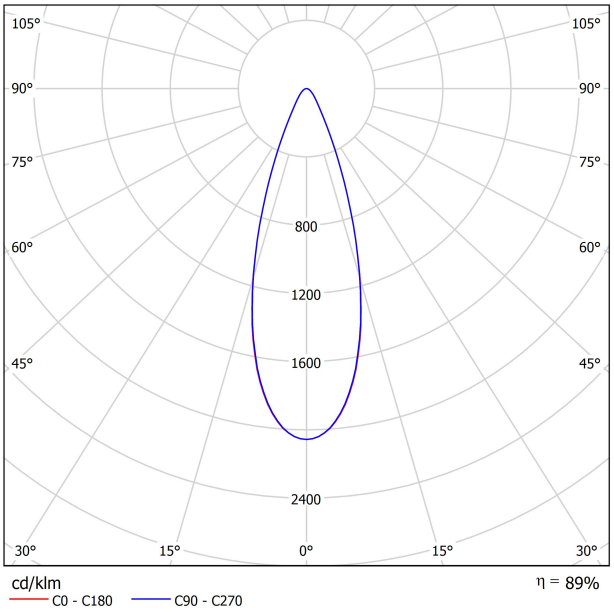


CONICAL DIAGRAM

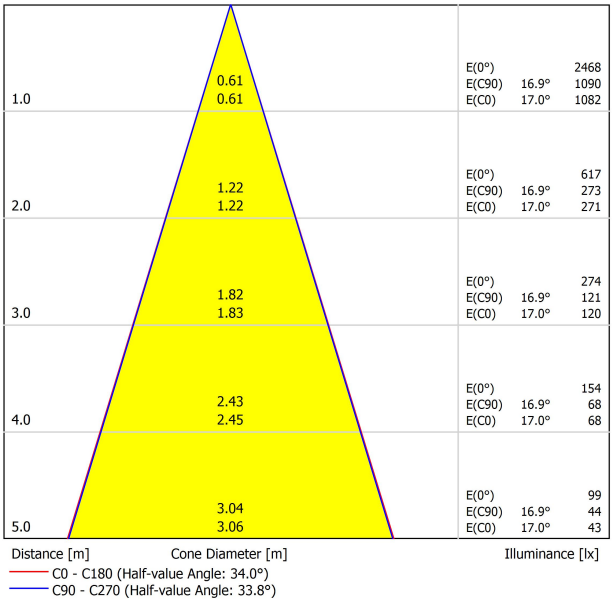

# Anti-glare Honeycomb Louver

ARKOSLIGHT

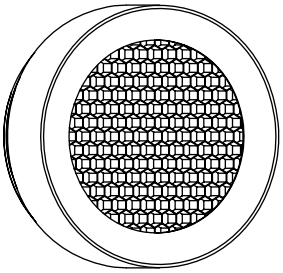

| | PRODUCT |
|---|---|
| Model | Anti-glare Honeycomb Louver |
| Reference | **U498-90-00** \| **WT** \| **NT** \| |
| Category | Accessories |

NOT SOLD SEPARATELY.

## Anti-glare Honeycomb Louver

Accessory featuring a honeycomb structure designed to control the light beam, reduce glare, and prevent direct exposure to the light source.

Calle N, s/n - Pol. Ind. El Oliveral
46394 Ribarroja del Turia-Valencia (Spain)
info@arkoslight.com - www.arkoslight.com

5Year GUARANTEE

# Anti-glare Screen

ARKOSLIGHT

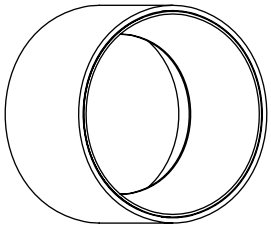

| | PRODUCT |
|---|---|
| Model | Anti-glare Screen |
| Reference | **U498-90-01** \| **WT** \| **NT** \| |
| Category | Accessories |

NOT SOLD SEPARATELY.

## Anti-glare Screen

Accessory designed to reduce direct glare, especially in luminaires with visible optics, and improve visual comfort by blocking uncomfortable emission angles.

Calle N, s/n - Pol. Ind. El Oliveral
46394 Ribarroja del Turia-Valencia (Spain)
info@arkoslight.com - www.arkoslight.com

5Year GUARANTEE

# Linear Filter

ARKOSLIGHT

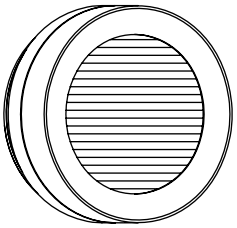

| | PRODUCT |
|---|---|
| Model | Linear Filter |
| Reference | **U498-90-02** \| **WT** \| **NT** \| |
| Category | Accessories |

NOT SOLD SEPARATELY | SUITABLE FOR BEAM ≤ 34º

## Linear Filter

Transforms the circular light beam into a linear shape. Ideal for applications requiring precise, linear light distribution, allowing you to focus on specific surfaces or avoid the effect of “light pooling” in wide areas.

Calle N, s/n - Pol. Ind. El Oliveral
46394 Ribarroja del Turia-Valencia (Spain)
info@arkoslight.com - www.arkoslight.com

5Year GUARANTEE