Nano

ARKOSLIGHT

DIMENSIONS

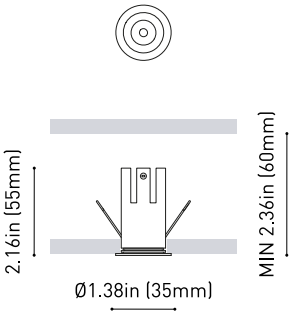

	PRODUCT
Name	NANO RECESSED UL SPOT 3500K N
Reference	U5390003N
Color	Black
RAL	Color in the mass looks alike RAL 9005
Category	CEILING RECESSED

	MOUNTING ACCESSORY / DRIVER
Mounting Accessory / Driver	Mandatory, not included. See next page
Model	REMOTE BOX 1–3.6W 100mA
Reference	U1000130

	LIGHT SOURCE
Type	LED
Gross luminous flux	310 Lm
Color temperature	3500 K
Chromatic stability	MacAdam Step 2
Color Rendering Index	CRI>90
Power	2 W
Current	100 mA
Efficacy	155 Lm/W
LED lifespan	L80B10>55.000h

	LIGHTING FIXTURE | PHOTOMETRIC DATA
Lighting efficiency	76%
Delivered luminous flux	236 Lm
Light beam angle	18°

	LIGHTING FIXTURE | ELECTRICAL DATA
Power values of the system	3.3 W
Voltage	120-277 V
Frequency	50/60 Hz
Dimming	0-10V / TRIAC/ELV

	OTHER DATA
IC Rated	Yes
Environmental location	DAMP

Nano is an exercise in formal synthesis that redraws the boundaries of technical lighting, offering maximum light output with minimum use of raw materials.

Calle N, s/n - Pol. Ind. El Oliveral
46394 Ribarroja del Turia - Valencia (Spain)
info@arkoslight.com - www.arkoslight.com

5 Year GUARANTEE*

Nano

ARKOSLIGHT

	OTHER DATA
Recess measurements	Ø1.18 in | Ø30 mm
Weight	0.110 lb | 50 gr
Packaged weight	0.179 lb | 81 gr
Packaging dimensions	3.15 x 2.68 x 3.54 in | 80 x 68 x 90 mm
Materials	Aluminium - Acrylonitrile Butadiene Styrene - Polycarbonate

Intertek

DIMENSIONS

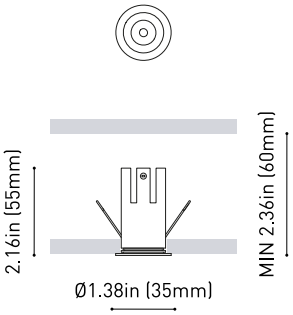

Nano is an exercise in formal synthesis that redraws the boundaries of technical lighting, offering maximum light output with minimum use of raw materials.

Calle N, s/n - Pol. Ind. El Oliveral
46394 Ribarroja del Turia - Valencia (Spain)
info@arkoslight.com - www.arkoslight.com

5 Year GUARANTEE*

Mounting Accessory / Driver

ARKOSLIGHT

Mandatory / Not Included

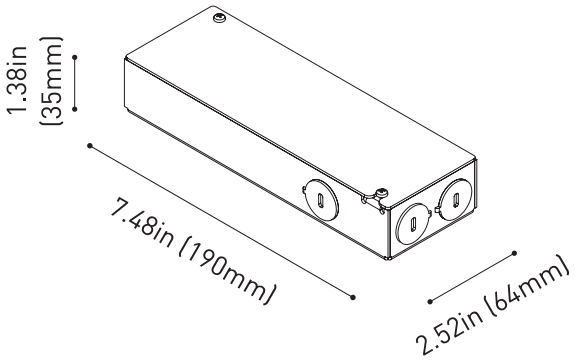

	PRODUCT
Model	REMOTE BOX 1–3.6W 100mA
Driver	Included
Reference	U1000130
IC Rated	Yes
Dimming	0-10V / TRIAC/ELV
Size	7.48 x 2.52 x 1.38 in | 190 x 64 x 35 mm
Weight	1.21 lb | 550 gr
Packaged weight	1.46 lb | 665 gr
Packaging dimensions	11.26 x 2.91 x 1.77 in | 286 x 74 x 45 mm
Nº Luminaires	1
LED - Driver Distance	Maximum suggested distance is 24 feet

	INPUT CHARACTERISTICS
Input Voltage	120-277 V
Frequency	50/60 Hz

	OUTPUT CHARACTERISTICS
Output Voltage	10 - 40 V
Output Current	100 mA
Output Power	1 - 3.6 W

Calle N, s/n - Pol. Ind. El Oliveral
46394 Ribarroja del Turia - Valencia (Spain)
info@arkoslight.com - www.arkoslight.com

5 Year GUARANTEE*

Wiring Diagram

ARKOSLIGHT

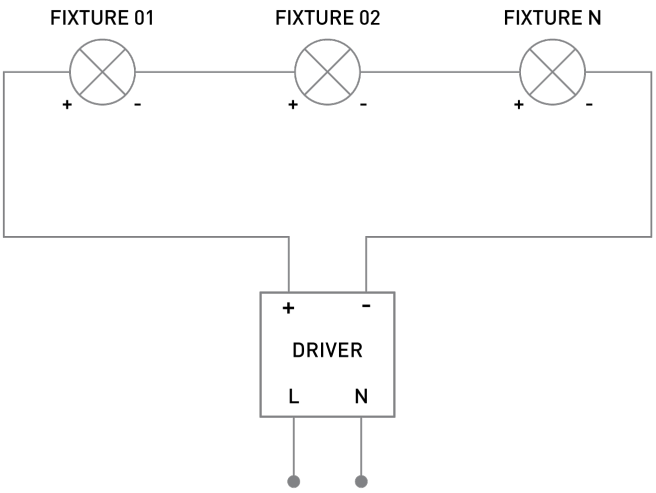

SERIAL CONNECTION FOR SEVERAL FIXTURES TO A SINGLE CONSTANT CURRENT DRIVER
RESPECT THE DISTANCE LED - DRIVER

Calle N, s/n - Pol. Ind. El Oliveral
46394 Ribarroja del Turia - Valencia (Spain)
info@arkoslight.com - www.arkoslight.com

5 Year GUARANTEE*

Lighting Technical Data

ARKOSLIGHT

POLAR DIAGRAM

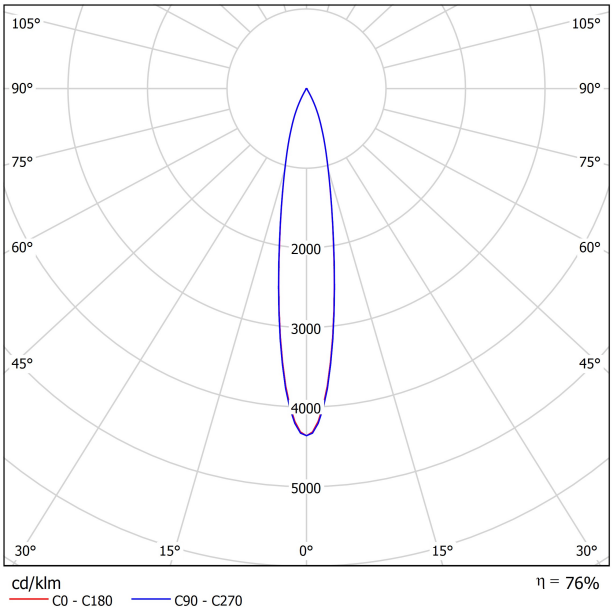

CONICAL DIAGRAM

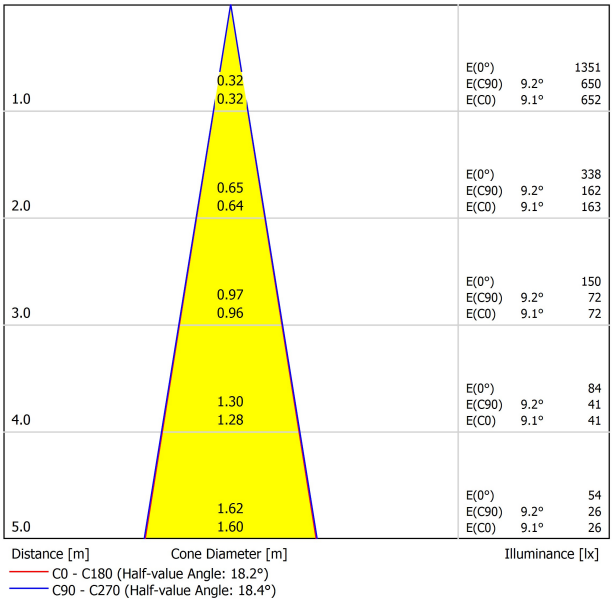

UGR

Glare Evaluation According to UGR

ρ Ceiling		70	70	50	50	30	70	70	50	50	30
ρ Walls		50	30	50	30	30	50	30	50	30	30
ρ Floor		20	20	20	20	20	20	20	20	20	20
Room Size X	Y	Viewing direction at right angles to lamp axis					Viewing direction parallel to lamp axis				
2H	2H	8.8	9.4	9.0	9.6	9.8	9.1	9.8	9.3	9.9	10.1
	3H	9.2	9.8	9.5	10.1	10.3	9.6	10.2	9.9	10.4	10.7
	4H	9.5	10.0	9.8	10.3	10.5	9.8	10.4	10.1	10.6	10.9
	6H	9.7	10.2	10.0	10.5	10.8	10.0	10.5	10.3	10.8	11.1
	8H	9.8	10.3	10.1	10.6	10.9	10.1	10.6	10.5	10.9	11.2
	12H	10.0	10.5	10.4	10.8	11.1	10.3	10.8	10.7	11.1	11.4
4H	2H	8.9	9.5	9.2	9.7	10.0	9.2	9.8	9.5	10.0	10.3
	3H	9.6	10.0	9.9	10.3	10.6	9.9	10.3	10.2	10.6	11.0
	4H	9.9	10.3	10.3	10.6	11.0	10.2	10.6	10.6	10.9	11.3
	6H	10.3	10.6	10.7	11.0	11.4	10.6	10.9	11.0	11.3	11.6
	8H	10.5	10.8	10.9	11.2	11.6	10.8	11.1	11.2	11.4	11.8
	12H	10.8	11.1	11.3	11.5	11.9	11.0	11.3	11.5	11.7	12.1
8H	4H	10.0	10.3	10.5	10.7	11.1	10.3	10.6	10.7	11.0	11.4
	6H	10.6	10.8	11.0	11.2	11.7	10.8	11.1	11.3	11.5	11.9
	8H	10.9	11.1	11.4	11.5	12.0	11.1	11.3	11.6	11.8	12.2
	12H	11.4	11.6	11.9	12.0	12.5	11.6	11.7	12.0	12.2	12.7
12H	4H	10.1	10.3	10.5	10.7	11.1	10.3	10.6	10.7	11.0	11.4
	6H	10.6	10.8	11.1	11.3	11.7	10.9	11.1	11.4	11.5	12.0
	8H	11.0	11.2	11.5	11.6	12.1	11.3	11.4	11.7	11.9	12.4
Variation of the observer position for the luminaire distances S											
S = 1.0H		+1.4 / -0.6					+1.2 / -0.5				
S = 1.5H		+2.8 / -1.5					+2.3 / -1.2				
S = 2.0H		+4.3 / -2.2					+3.7 / -2.1				
Standard table		BK03					BK03				
Correction Summand		-3.2					-3.1				
Corrected Glare Indices referring to 310lm Total Luminous Flux											